INTRODUCTION

To the owner or user: The service manual you are reading is intended to provide you, and the maintenance or service technician with the information needed to install, start up, clean, maintain, and service this ice maker-dispenser.

The ND650 is a combination nugget ice maker and countertop dispenser, with the option of wall mounting. A water station is standard.

The ND650 ice making section is equipped with the following features: electronic controls for bin level and low water; thermostatic expansion valve; front service for most components; and R502 refrigerant. The ice dispensing section is a seamless plastic storage bin, with a stainless steel ice agitator at the bottom to sweep the ice into the dispensing chute.

TABLE OF CONTENTS

For the Installer
- Specifications 2
- Environmental Limitations 3
- Wall Mount Kit 5
- Soda Valve Kit 6

For the Plumber 7

For the Electrician 8

Final Check List 9

Start Up 10

Component Description 11

Electrical Sequence 14

Operation 15

Maintenance and Cleaning 18

Service Diagnosis 21

Removal and Replacement
- Water Reservoir 26
- Bin Controls 26
- Breaker and Bearing 27
- Auger 28
- Water Seal 29
- Evaporator 30
- Gearmotor 31

Electronic Tester 33

Parts Lists and Wiring Diagrams are printed on yellow paper in the center of this manual.

ND650

FOR THE INSTALLER: Specifications

This ice maker-dispenser is designed to be mounted on a machine stand, or a countertop, or using wall mounting kit KWB3, hung from a wall. The sink may be retained, or removed and the optional longer splash panel (KSP1) installed in place of the original. Instructions for each kit are included in this service manual.

Before beginning the installation, check that all the materials and kits required are available at the installation location.

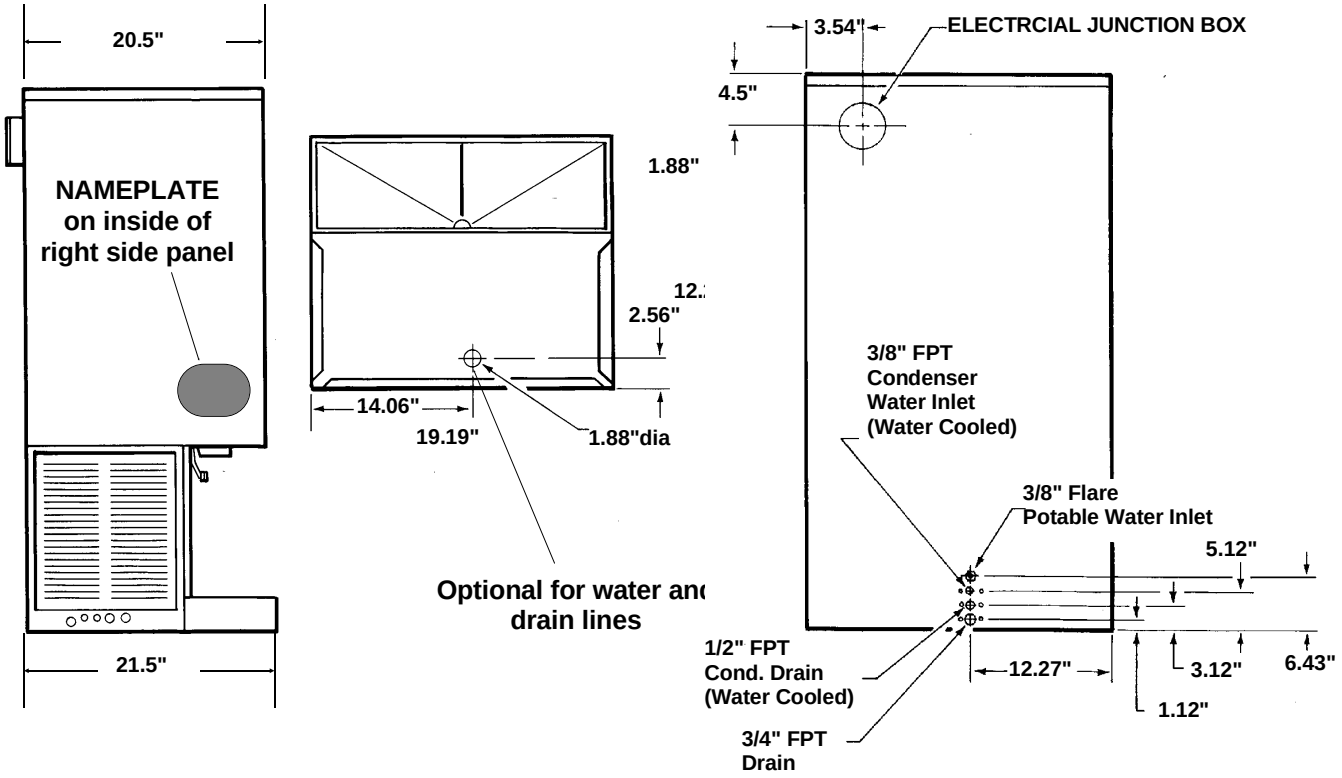

SPECIFICATIONS

Model Number	Dimensions (w/o stand) H" x W" x D"	Ice Type	Condenser Type	Cabinet Finish	Basic Electrical	Minimum Circuit Ampacity+	Maximum Fuse Size
ND650AE-1A	48.88 x 26 x 21.5	NUGGET	Air	Painted	115/60/1	17.2	20
ND650WE-1A	same	same	Water	Painted	115/60/1	16.2	20
ND650AS-1A	same	same	Air	Stainless	115/60/1	17.2	20
ND650WS-1A	same	same	Water	Stainless	115/60/1	16.2	20

+ Minimum Circuit Ampacity is used to determine wire size and type per National Electric Code.

FOR THE INSTALLER: Environmental Limitations

Installation Limitations

This ice system is designed to be installed indoors, in a controlled environment.

	Minimum	Maximum
Air Temp	50^0F.	100^0F.
Water Temp	40^0F.	100^0F.
Water Pressure	20 PSI	80 PSI
Voltage	104	126

Operating the machine outside of the above limitations, or outdoors, is potentially damaging to the machine; also it is misuse of the machine, which may void the warranty.

Scotsman Ice Systems are designed and manufactured with the highest regard for safety and performance. They meet or exceed the standards of UL, NSF, and CSA.

Scotsman assumes no liability or responsibility of any kind for products manufactured by Scotsman that have been altered in any way, including the use of any part and/or other components not specifically approved by Scotsman.

Scotsman reserves the right to make design changes and/or improvements at any time.

Specifications and design are subject to change without notice.

Water Limitations

An ice machine is a food manufacturing plant; it takes a raw material, water, and turns it into a food product, ice. The purity of the water is very important in obtaining pure ice and in maximizing product life. This section is not intended as a complete resource for water questions, but it does offer these general recommendations:

1. Filter the water used to produce ice. That is the water going to the "potable" water connection. Water filters vary greatly in ability and function. Install one that filters out suspended solids to a dimension of 5 microns or smaller. The finer the filter the better, but finer filters will clog sooner than course ones. It may be necessary to add a course filter ahead of the fine filter to prolong filter life.

2. Check with a water treatment specialist for a water test, and recommendations regarding filters and treatment.

Service Limitations

Do not install in a location where the top of the machine is within 6" of a fixed ceiling. Do not install air cooled models in a location where there is less than 6" clearance to the left and right of the cabinet.

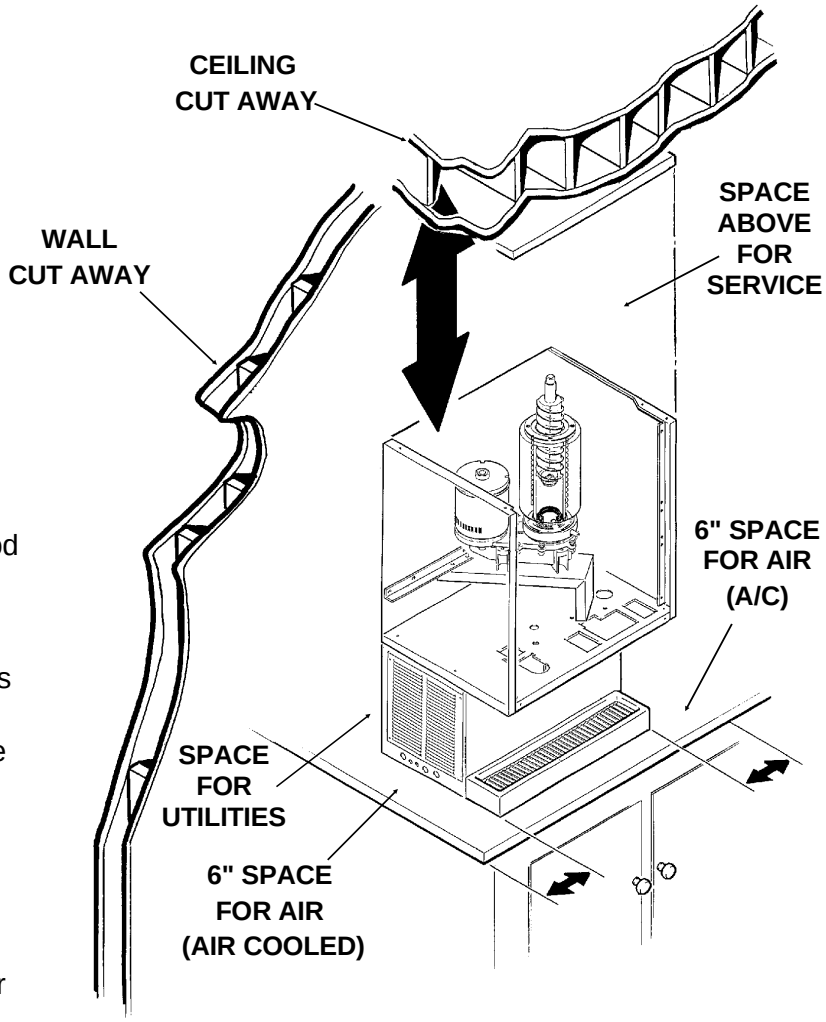

Location

After uncrating and inspection, the unit is ready for installation. It is important that the machine be installed in a location where it has enough space above and behind it for service. Air cooled models require a minimum of 6 inches to the left and right of the machine for air circulation.

Machine Stand Installation

Tip the stand on it's back and install the legs, return the stand to the upright position. Adjust leg levelers so that the stand does not "rock".

Counter Top or Machine Stand Installation

The base of the icemaker-dispenser must be sealed to the object it rests upon. Food grade silastic sealant such as Scotsman part number 19-0529-01 is recommended.

Place a bead of the sealant on the machine stand or counter top to match the outside edge of the cabinet base and sink.

The icemaker-dispenser is heavy: use of a mechanical hoist is recommended to lift it to the height required to install it.

The DMS machine stand has holes in the top that match up with "feet" on the icemaker-dispenser. Place the cabinet onto the machine stand, so that the unit "snaps" into place.

In both counter top and machine stand installations, wipe off and neatly smooth any excess sealant. Level the machine stand and cabinet.

Unpack and install the sink brackets. Remove the splash panel. Fit the sink assembly onto the two sink brackets (push the sink down over the brackets at the back), connect the drain, and press the sink onto the bead of sealant. Wipe off and neatly smooth any excess sealant from under the sink edge. Replace the splash panel.

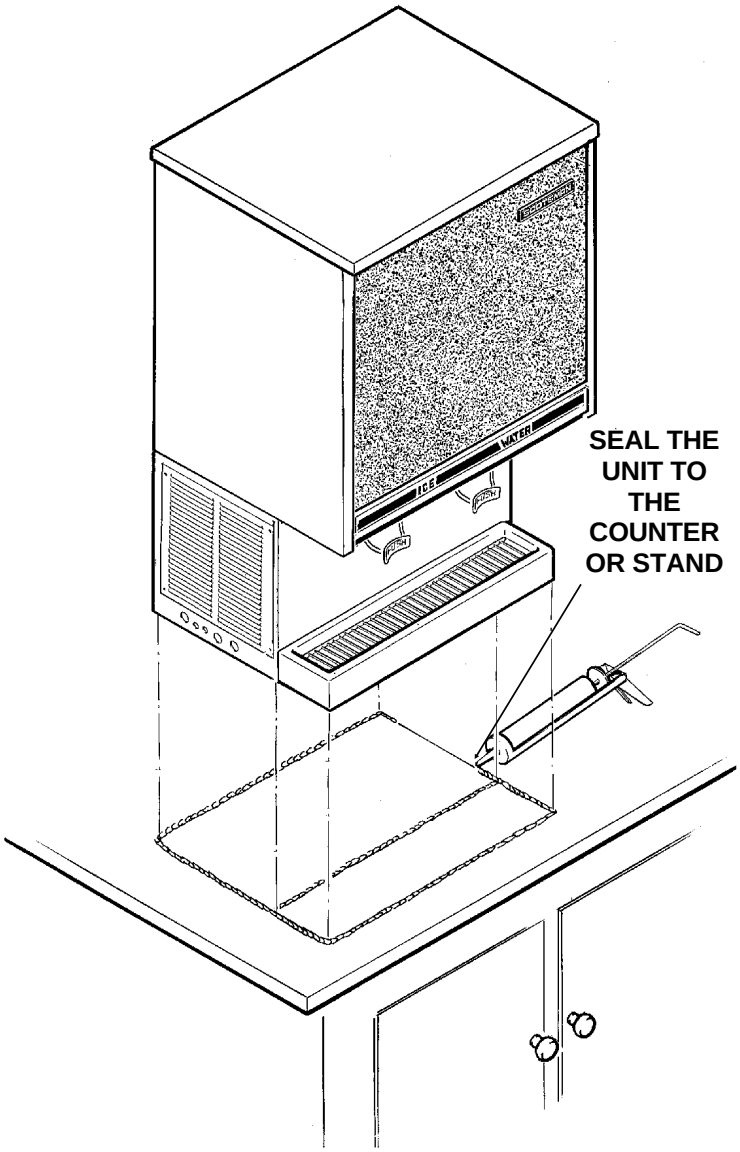

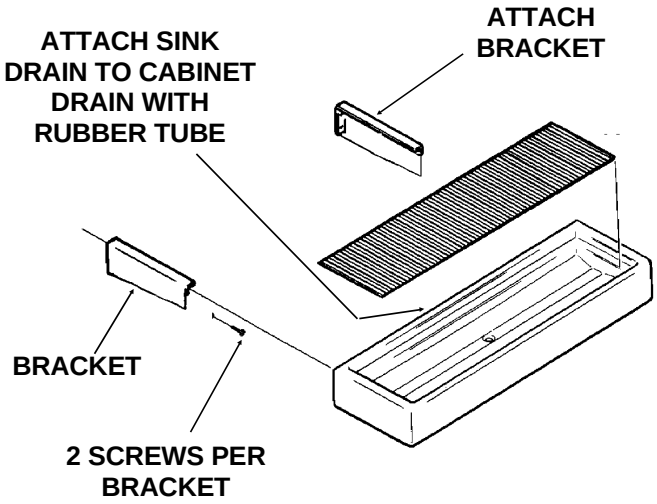

FOR THE INSTALLER: Wall Mount Kit

////////////////////////WARNING////////////////////////////////

It is recommended that the wall mounting installation be done by an experienced contractor. The weight of the machine when in use may exceed 350 pounds. The unit should be mounted on a solid, rigid wall with proper fasteners for that type of wall and of adequate strength to support the weight of the machine when in use.

//

Clearance between the wall and the icemaker is a maximum of 1 inch. Check utility connections first. The electrical junction box will have to be removed, and the electrical connections made inside the cabinet in compliance with local codes. The plumbing connections may be made through the base, or at either side through the pre-punched holes, using standard plumbing practices.

Interior plumbing lines must be disconnected from the original connections and plugged when routing through the side or base.

1. Remove machine top. Attach bracket "A" to machine using (3) nuts, (3) flat washers, (3) lockwashers, and (3) 5/16-18 bolts received with the kit.

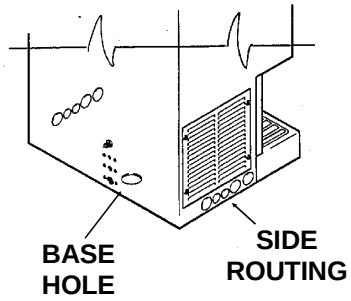

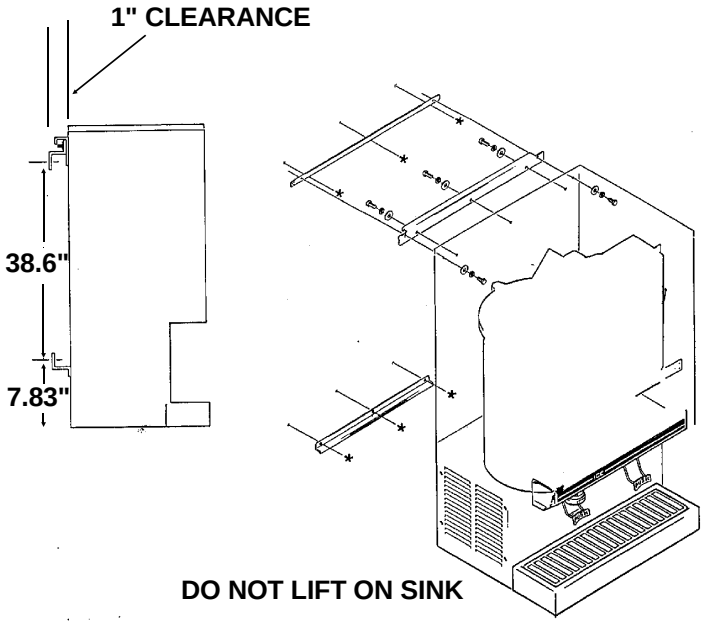

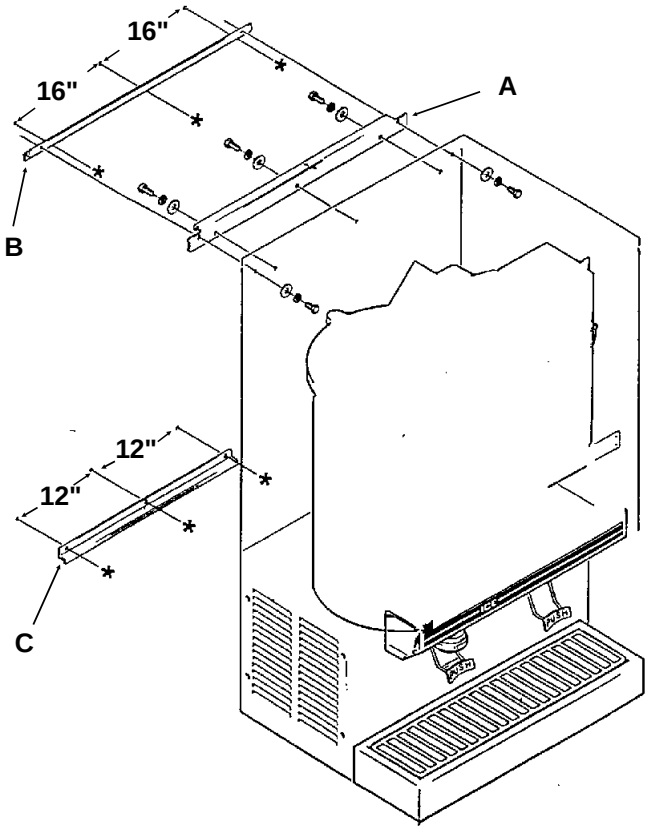

2. Mount brackets "B" and "C" to the wall at the dimensions shown for the unit. (hardware for this is not included).

//

Use fasteners and wall of sufficient strength to carry the use and weight of the icemaker-dispenser.

//

3. Lift unit up and hook bracket "A" over bracket "B". Slide unit until the two remaining holes are aligned and secure with the remaining (2) 1/4-20 bolts, flat washers and lockwashers.

ND650

FOR THE INSTALLER: Soda Valve Kit

Installation Instructions

Note: Carbonator and carbonated product cooling system are not included.

////////////////////////**WARNING**////////////////////////////

Disconnect electrical power to the icemaker - dispenser.

//

1. Remove cabinet top panel, front panel, and splash panel.
2. Remove screws and remove filler plate from the ice maker dispenser.
3. Remove large plug from base of icemaker-dispenser.
4. Install valve assembly in the ice machine with

Note: The water glass filler station will have to be removed, this includes: glass filler lever, water tube, spring, as well as the filler plate with the switch on it. The solenoid valve may be left in place.

two screws through the same holes that held on the valve cover plate. Install 1-3/8" ID insulation tube over the syrup and carbonated lines.

5. Route product lines through the hole in the base.
6. Make all required connections soda line connections, using field supplied materials. All lines should be insulated. A carbonated water recirculating line is provided and recommended to insure that high quality drinks are dispensed.
7. Install transformer in upper compartment of icemaker-dispenser, using screws provided. It may be necessary to pre-drill holes.
8. Route drink valve assembly electrical leads up to the transformer.
9. Connect wire leads from the drink valves to the 24 volt output side of the transformer.
10. Locate a 115 volt continuous power source from within the icemaker control box. Route white and black leads from the 115 volt input side of the transformer and connect to the 115 volt power source.
11. Turn on power and soda equipment, check operation and check for leaks. Adjust valves for proper mixture.

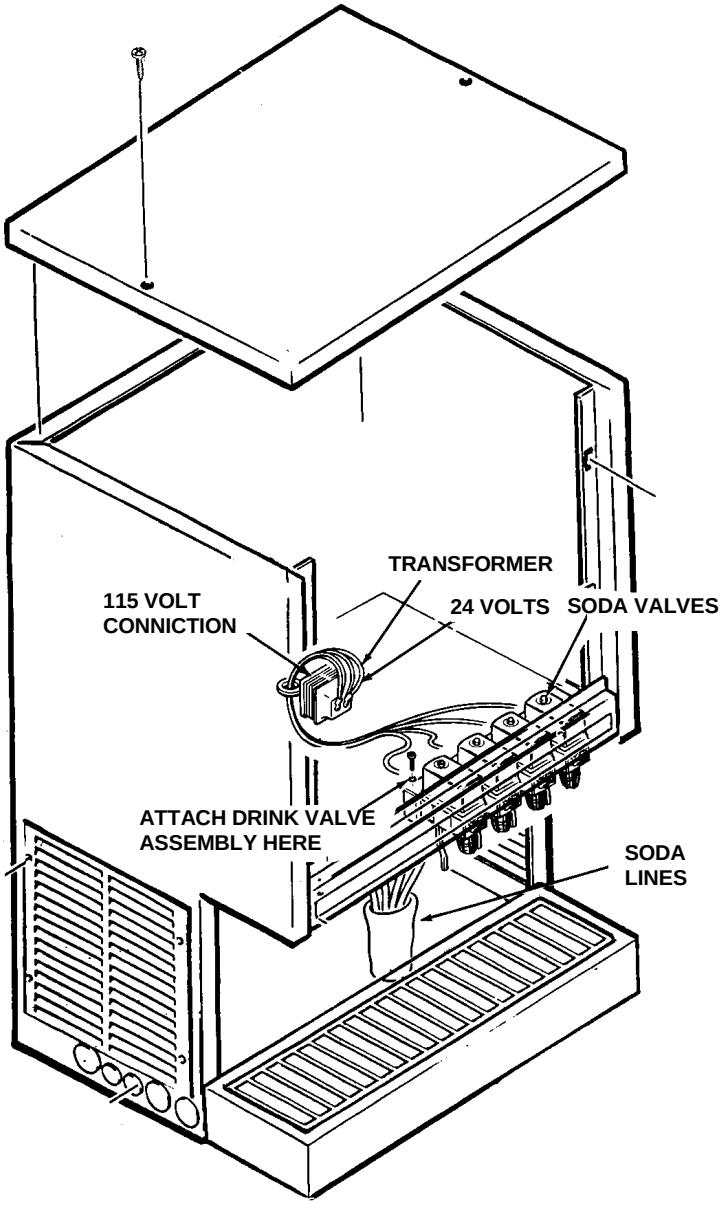

CONFORM TO ALL APPLICABLE CODES

Water Inlet

Air Cooled Models: The recommended water supply is clean, cold water. Use 3/8" O.D. copper tubing, connect to the 3/8" male flare at the back of the cabinet. Install a hand valve near the machine to control the water supply.

Water Treatment: In most areas, a water filter of some type will be useful. In areas where the water is highly concentrated with minerals the water should be tested by a water treatment specialist, and the recommendations of the specialist regarding filtration and/or treatment should be followed.

Water Cooled Models: A separate 3/8" O.D. copper line is recommended, with a separate hand valve to control it. It is connected to a 3/8" FPT condenser inlet at the back of the cabinet. The water pressure to all lines must always be above 20 psig, and below 120 psig.

Drains

Air Cooled Models: There is one 3/4" FPT drain at the back of the cabinet, the drain line is of the gravity type, and 1/4 inch per foot fall is an acceptable pitch for the drain tubing. There should be a vent at the highest point of the drain line, and the ideal drain receptacle would be a trapped and vented floor drain. Use only 3/4" rigid tubing.

Water Cooled Models: In addition to the above mentioned drain, a separate condenser drain must be installed. Connect it to the 1/2" condenser drain connection at the back of the cabinet.

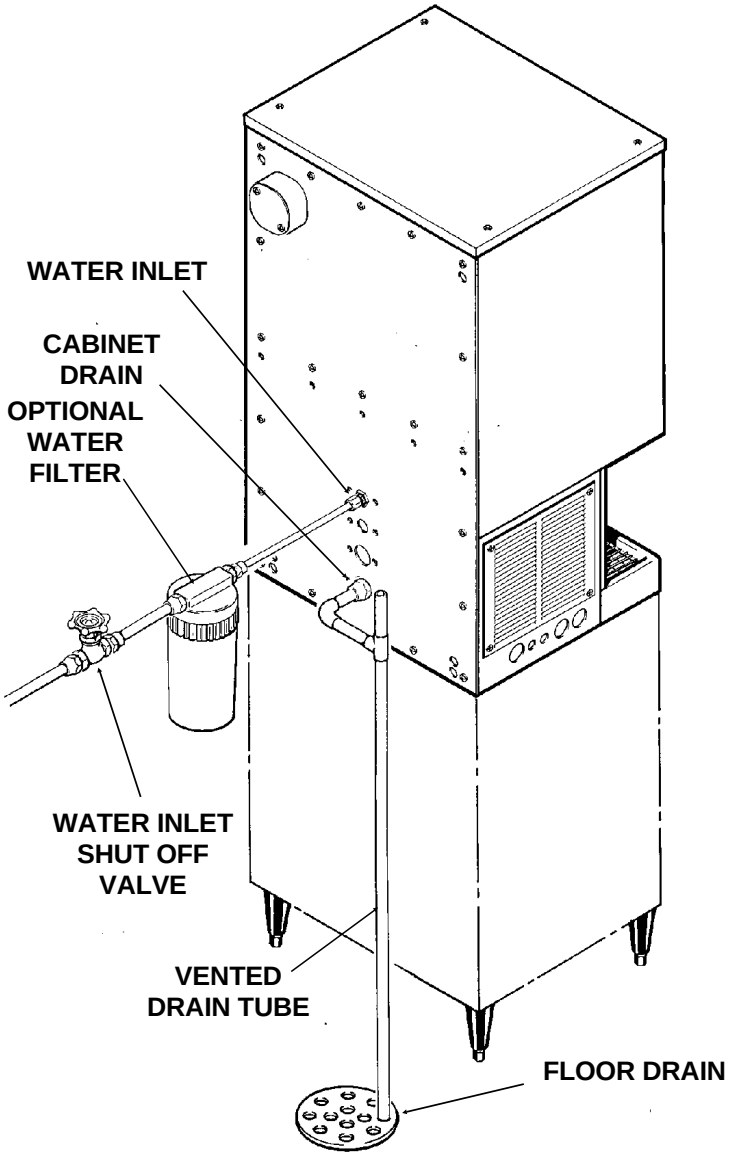

WATER COOLED DETAIL

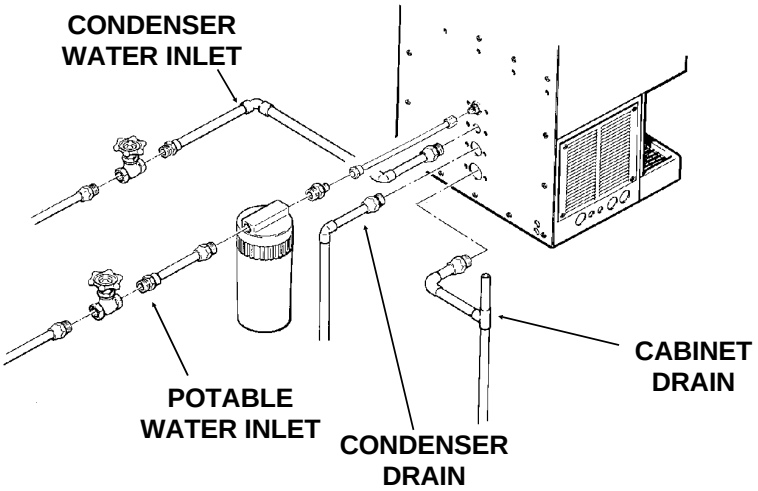

CONFORM TO ALL APPLICABLE CODES

The electrical power to the unit is supplied through the junction box at the rear of the machine.

Check the nameplate (located on the back panel) for the voltage requirements, and for the minimum circuit ampacity. The machine requires a solid chassis to earth ground wire.

The ice maker should be connected to its own electrical circuit so it would be individually fused. Voltage variation must remain within design limitations, even under starting conditions.

All external wiring must conform to national, state, and local electrical codes. The use of a licensed electrician is required to perform the electrical installation.

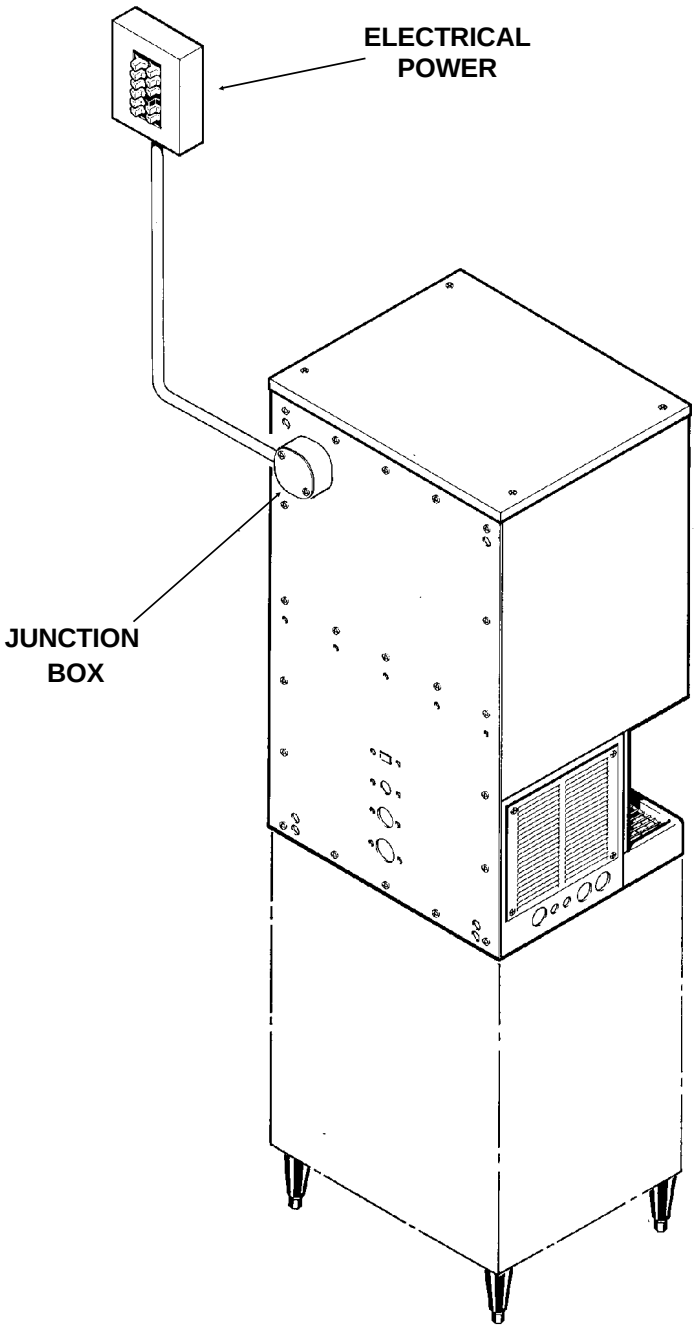

FOR THE INSTALLER: Final Check List

1. Is the icemaker-dispenser installed indoors, in a location where the air and water temperatures are controlled, and where they do not go beyond design limitations?

2. is there an electrical service disconnect within sight of the installed machine? Is the machine on a separate circuit? Has the voltage been checked and compared to nameplate requirements?

3. Have all of the plumbing connections been made and checked for leaks?

4. Has the machine been leveled?

5. Is there a minimum of 6 inches of clearance at the left and right sides of an air cooled machine?

6. Is there a minimum of 6 inches of clearance at the top and back of the machine for service and utility connections?

Wall mounted only: Is the machine properly installed and secured to the wall?

7. Is there a water shut off valve installed near the machine?

8. Have all of the shipping blocks been removed?

BACK VIEW OF COMPLETED INTSTALLATION

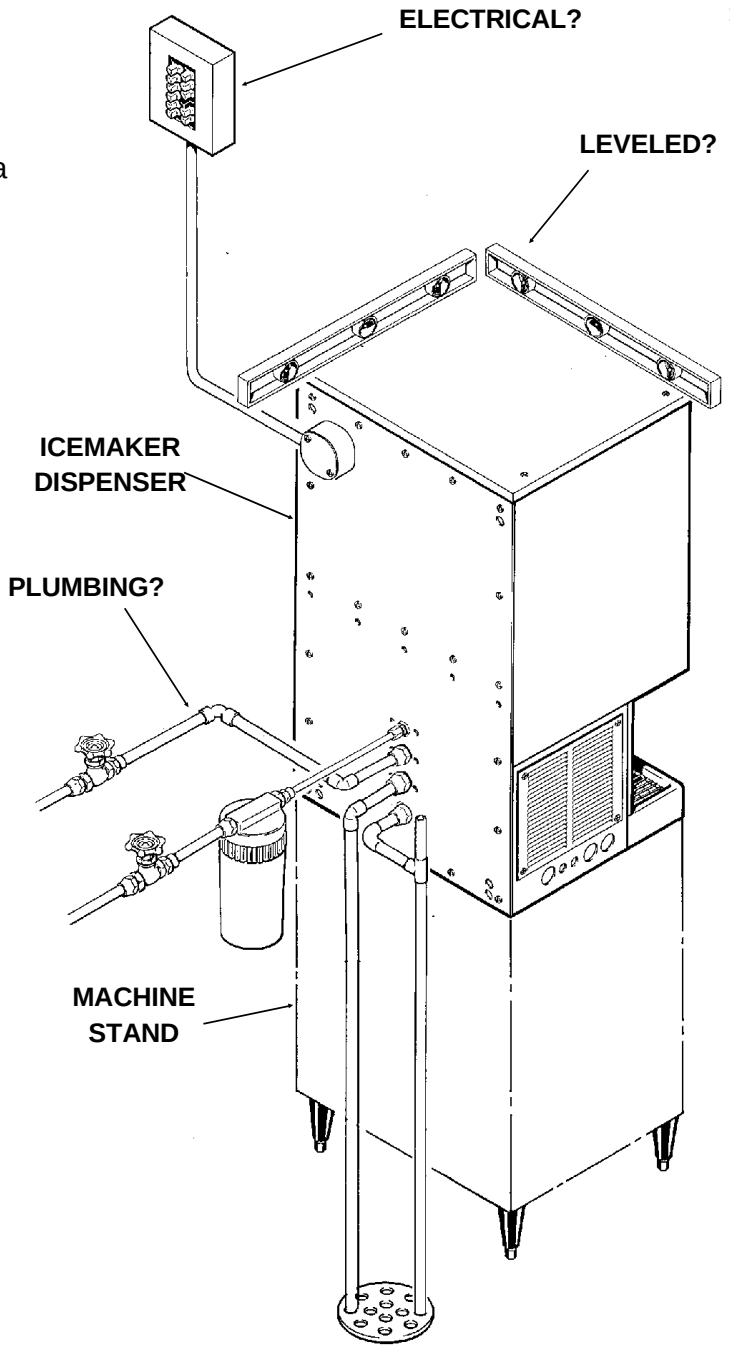

INITIAL START UP

Pre Start Inspection

1. Remove the two front panels.
2. Check that all shipping blocks have been removed.
3. Remove any and all packing tape (check inside the storage bin).
4. Inspect the interior of the machine for loose screws or wires. Check that no refrigerant lines are rubbing each other. Check that the fan blade on air cooled models turns freely.
5. Check that the machine is installed correctly according to the final check list.

Start Up

1. Go through the pre start inspection.

2. Open the water hand valve, observe that water enters the water reservoir, fills the tube from the reservoir to the evaporator and then shuts off. Check for leaks.

3. Switch the master switch on. The electrical start up sequence is now on automatic:

A. There will be a short (15 second) delay before the gearmotor starts.

B. After the gearmotor starts, the compressor will start.

4. On air cooled models, warm air will begin to flow from the condenser. Water cooled models will begin to discharge warm water down the drain.

5. The unit should soon be making ice. If desired, the low side pressure may be checked: it should be 30 PSIG + or - 4 PSIG.

The air cooled discharge pressure will depend upon air and water temperatures, but should be between 200 PSIG and 280 PSIG.

Water cooled discharge pressure should be about 220 PSIG. If needed, adjust the water regulating valve.

The above numbers are for new, clean machines. Field values may be somewhat higher or lower.

6. There are no adjustments to make, so replace the panels.

7. Check ice dispensing by pushing in on the glass filler lever. Ice dispenses are portion controlled; by turning a knob, the length of time the unit dispenses when the glass filler lever is pushed (and the amount of ice dispensed) is adjusted.

8. Switch off the icemaker-dispenser, remove the top panel and the top of the ice storage bin. Sanitize the interior of the ice storage bin by wiping it with a mixture of 1 ounce of household bleach to 1 gallon of water, allow to air dry. Replace all covers and panels. Switch the icemaker-dispenser back on.

9. Give the owner/user the service manual, instruct him/her in the operation and maintenance requirements of the unit. Make sure they know who to call for service.

10. Fill out the warranty registration card, and mail it in to Scotsman.

11. Fill out the field Quality Audit form, and mail it to Scotsman.

COMPONENT DESCRIPTION

Control Box: Contains the electrical controls that operate the machine.

High Pressure Cut Out Switch: A manual reset switch sensing the high side refrigeration pressure. It is set to shut the machine off, and illuminate the reset switch light if the discharge pressure should ever exceed 450 psig.

Evaporator: A vertical stainless steel tube, refrigerated, and water filled. In it there is a stainless steel auger.

Reservoir: Float operated, it maintains the water level in the evaporator at a constant level, it also contains the water level sensor.

Water Level Sensor: Senses if there is water in the reservoir to make ice out of. Will shut the machine off it there is none.

Ice Level Sensor: An electronic "eye", it senses the presence of ice in the bottom of the ice discharge chute. Operates to turn the ice machine on and off automatically as the level of ice in the bin changes.

Drain Tube: When uncapped and lowered, drains the evaporator.

Condenser: Air or water cooled, where the heat removed in ice making is discharged.

Ice Storage Bin Assembly: A plastic lined, insulated cylinder that receives, stores and dispenses the ice. Fresh ice enters at the top, and when the bin is full enough the ice will be between the ice level sensors, and the icemaking will stop. Ice is dispensed through a chute at the bottom front when the agitator assembly sweeps the ice over the chute.

Glass Filler Lever: Pushing in on this lever causes the ice dispensing cycle to occur.

Portion Control Knob: Turning this knob adjusts the length of time of dispense.

Low Pressure Cut Out Switch: A manual reset control that shuts off the ice machine when the low side pressure drops below a preset point, 0-4 psig.

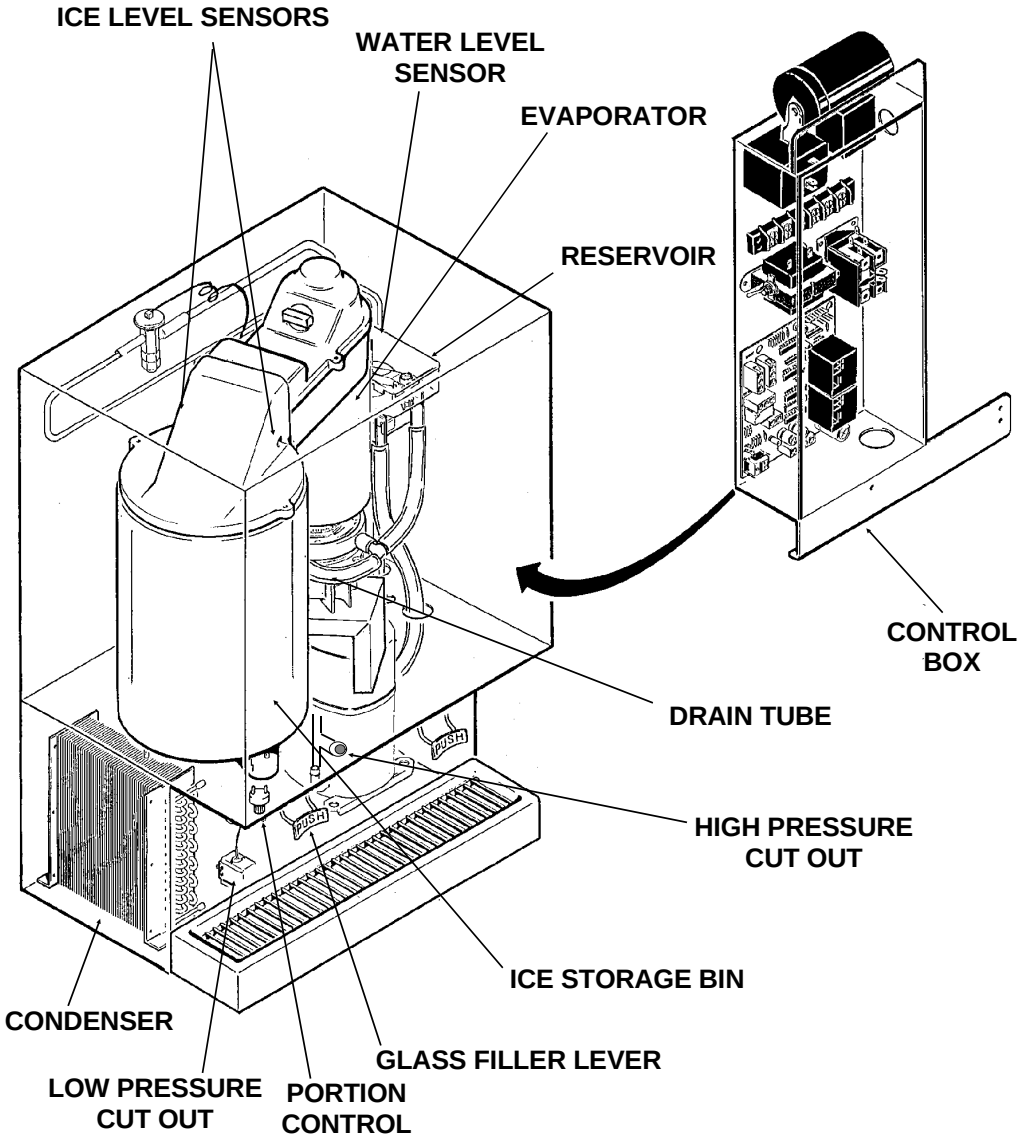

ND650
COMPONENT DESCRIPTION

Evaporator: A refrigerated vertical tube filled with water and containing a water seal and auger.

Auger: A solid stainless steel double spiral auger, it pushes the ice crystals up to the top of the evaporator.

Water Seal: A two part "face" seal, the top half rotating with the auger, the bottom half stationary, the sealing action being where the two seal "faces" meet.

Ice Sweep: A plastic cap with "fingers". It revolves with the auger to "sweep" the ice into the ice chute.

Breaker: Where the ice is compressed and much of the extra water is squeezed out of it before it is discharged into the bin.

Motor: A permanent split capacitor motor that drives the gear reducer.

Thrust Bearing: As the ice is pushed up the evaporator, the auger is thrust down, and pressure from the auger thrust is taken up by this bearing.

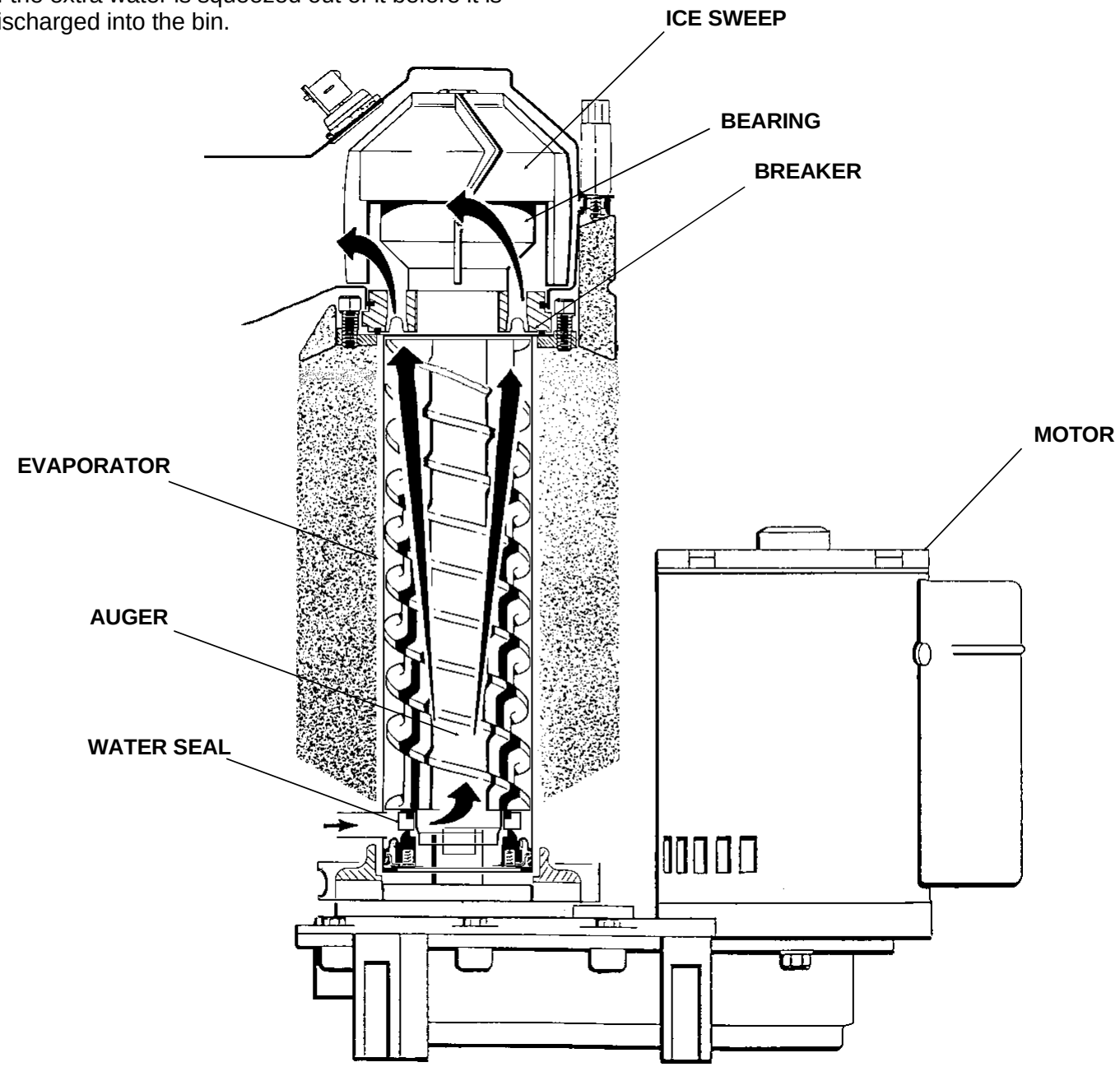

COMPONENT DESCRIPTION: Control Box

Contactor: A definite purpose contactor connecting the compressor to the power supply.

Circuit Board: Controlling the ice machine through sensors and relays. The sensors are for ice level and water level. The relays are for the gear motor (with a built in time delay to clear the evaporator of ice when the unit turns off) and for the compressor. The reset switch is mounted on the circuit board.

On/Off Switch: Manual control for the machine.

Transformer: Supplies low voltage to the circuit board.

Potential Relay: The compressor start relay.

Reset Switch: Part of Circuit Board, manual reset. Lights up when unit shuts off from: ice discharge chute being overfilled (opening the microswitch at the top of the chute); low or high pressure switches opening.

Portion Control Module: Controls the amount of time the dipensing drive motor is on. The time is varied by adjustine the portion control knob.

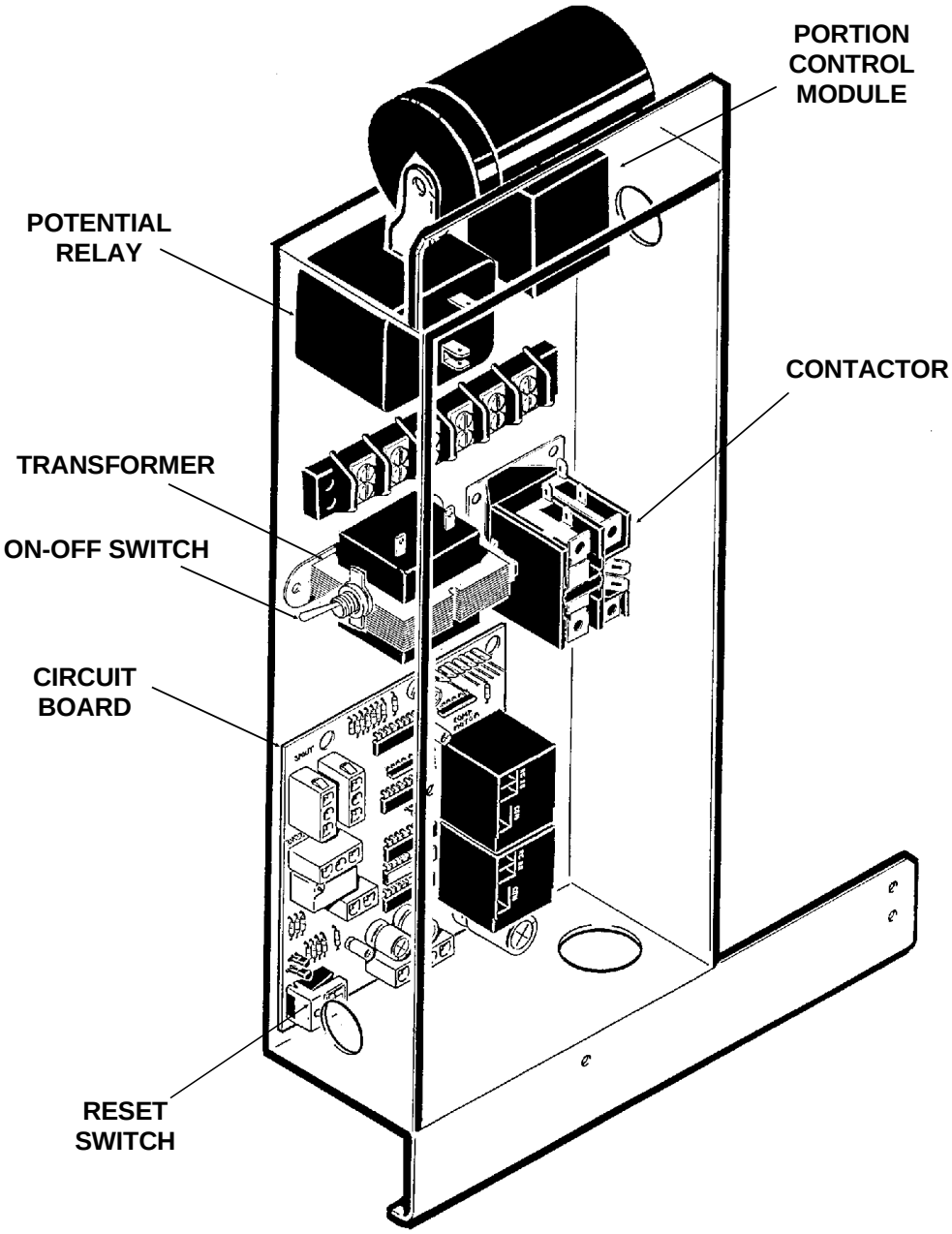

ELECTRICAL SEQUENCE

Refer the wiring diagram as needed.

If the machine is switched off at the master switch, but is otherwise ready to go, switching the master switch to on does the following:

- The bin empty light on the circuit board goes on
- There is a 15 second delay
- If there is enough water in the reservoir, the circuit board will allow the machine to start up.

Start up consists of:

- The compressor relay and auger motor relay become energized, connecting power to the windings of the auger motor.
- The auger motor starts, and the centrifugal switch closes, connecting power to the compressor contactor coil.
- The contactor is energized, connecting power to the compressor, and the compressor starts.
- As ice goes past the ice level sensors, the bin empty light will stay on, and the machine will continue to run, unless the ice stays between the sensors for more than 15 seconds (bin full). At that point, the bin empty light goes out, and the machine shuts down.

Shut Down consists of:

- The compressor relay opens.
- The compressor contactor opens
- The compressor stops
- The auger motor is run by the circuit board for 2.5 more minutes, clearing out ice in the evaporator, and then
- The auger motor relay opens, and the auger motor stops.

If the ice level sensor is clear (bin empty) for more than 15 seconds, the machine will start up again.

Another purpose of the circuit board is to turn the machine off if there is not enough water in the machine.

- When the water level in the reservoir falls below the water level sensor, the machine will "shut down"
- When the water refills the reservoir, the machine will start up again.

Separate from the circuit board:

- If the high pressure control (cut out switch) opens, the machine will stop immediately (through the relays on the circuit board) and cause the reset switch on the circuit board to light up. It must be manually reset at the control and at the reset switch on the circuit board.
- If the low pressure control (cut out switch) opens, the machine will stop immediately (through the relays on the circuit board) and cause the reset switch on the circuit board to light up. It must be manually reset at the control and at the reset switch on the circuit board.
- If the spout switch opens, the machine will stop immediately (through the relays on the circuit board) and cause the reset switch on the circuit board to light up. After it re-closes the reset switch on the circuit board must be manually reset.
- The master switch is the manual control for the complete machine, but it is not a service disconnect.

Ice Vending

- When the glass filler lever is pushed in the vend switch closes. That energizes the portion control module, which, depending upon the setting of the portion control knob, will power the agitator drive motor for a set length of time.
- Holding the glass filler lever in will not cause additional dispensing. Releasing and re-pushing the glass filler lever will repeat the dispense cycle.

OPERATION: Water

Water enters the machine through the 3/8" male flare at the rear of the cabinet, goes to a strainer and then to the water reservoir which it enters through the float valve. The water then goes out the bottom of the reservoir tank to the bottom of the evaporator.

Reservoir overflow, evaporator condensation and water in the sink are all routed to the drain. Water cooled models have a separate water circuit for the cooling water: it enters the fitting at the rear, goes to the water regulating valve, then to the water cooled condenser and down the drain.

The water dispensing station adds an additional water circuit. When the water station glass filler lever is pushed, a switch closes a circuit to an electric water valve, and water is dispensed.

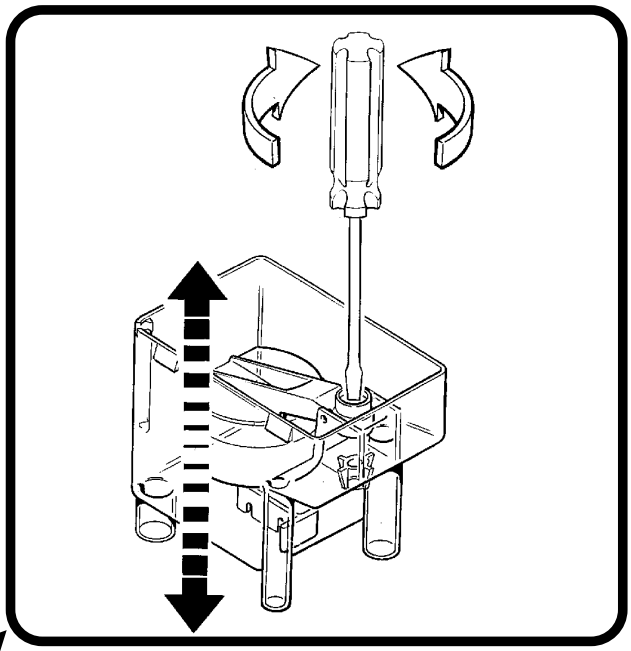

Adjustment of the Water Level

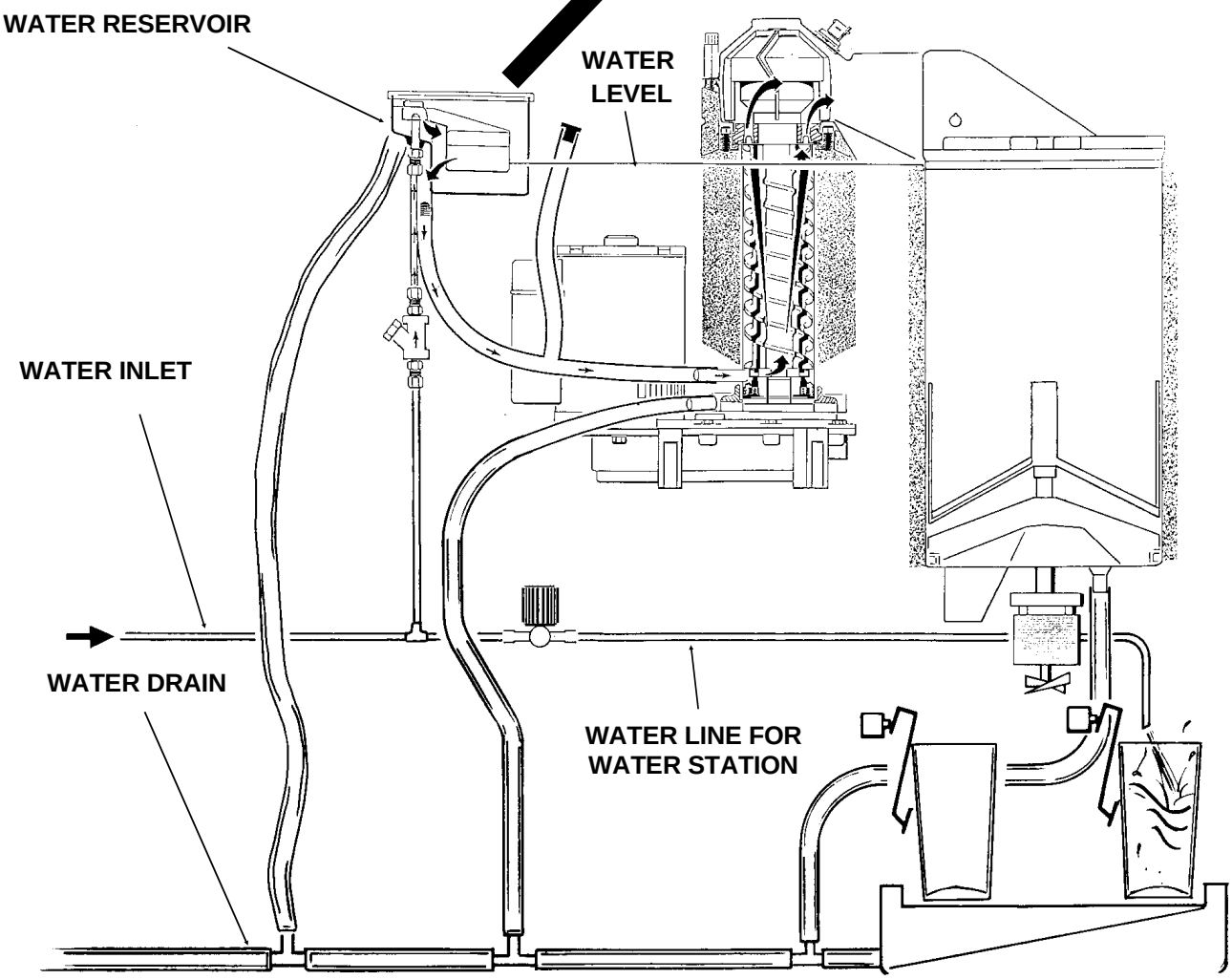

OPERATION: Refrigeration

Beginning at the compressor, the refrigerant 502 is compressed into a high temperature gas. The discharge line directs this gas to the condenser. At the condenser (air or water cooled) the gas is cooled by either air or water and it then condenses into a liquid. This high pressure liquid then goes through the liquid line to the expansion valve. The thermostatic expansion valve meters liquid refrigerant into the evaporator, the volume of liquid refrigerant depending upon the temperature of the evaporator; warmer evaporators get more refrigerant and colder evaporators get less.

At the evaporator, the refrigerant enters an area of relatively low pressure, where it can easily "boil off" or evaporate. As it evaporates, it absorbs heat from the evaporator and whatever is in contact with it (such as the water inside it). After the evaporator, the refrigerant, now a low pressure vapor, goes through the suction line back to compressor, where the cycle is repeated.

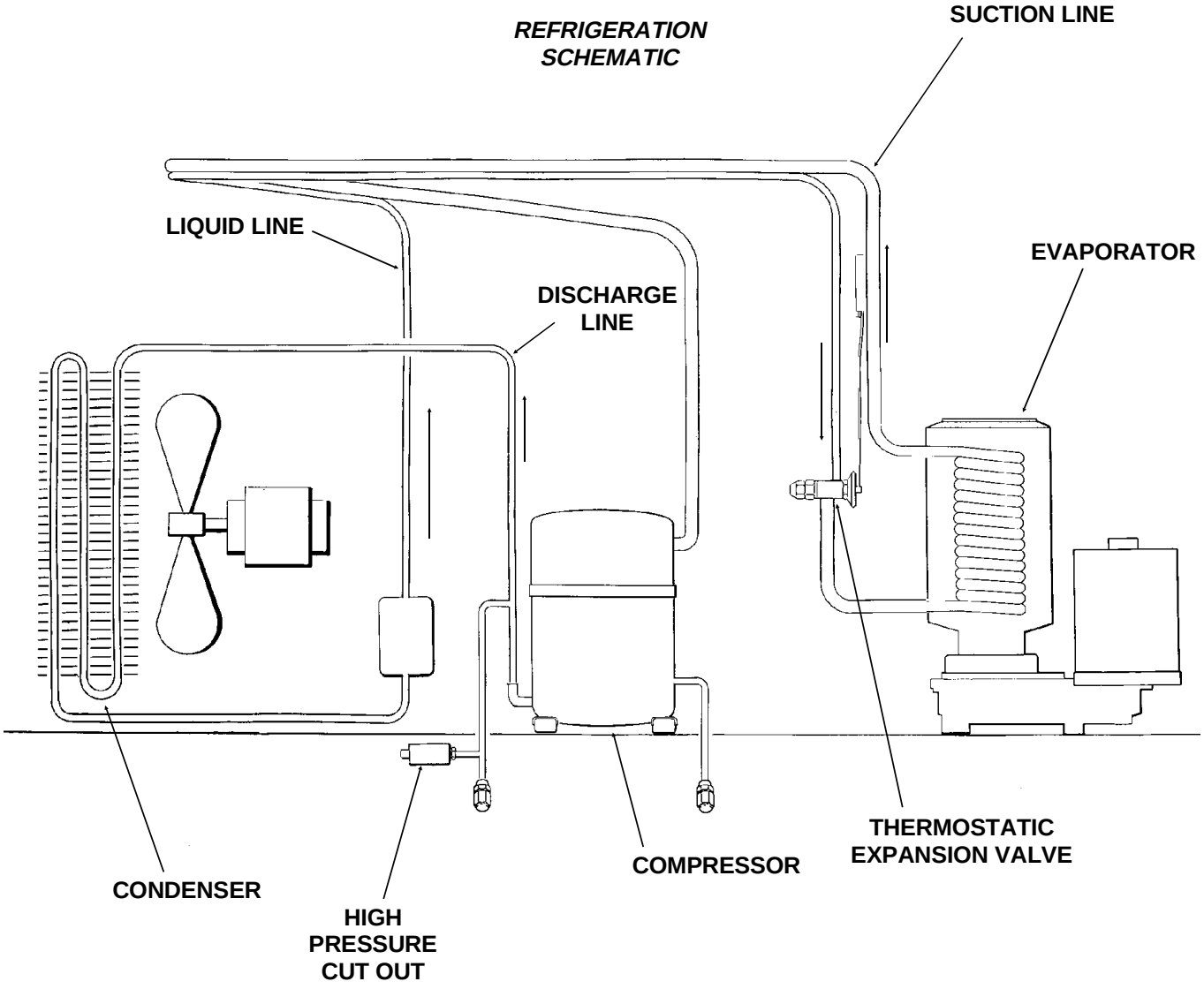

OPERATION: Ice Vending

When the ice dispensing glass filler lever is pushed, an electrical circuit is made to the portion control module in the control box. That module will energize the agitator drive motor for a certain length of time, depending upon the setting of the portion control knob.

The dispensing takes place when the agitator sweeps the ice over the ice dispensing chute: ice will continue to discharge out this chute as long as the agitator is turning. It stops when the agitator stops.

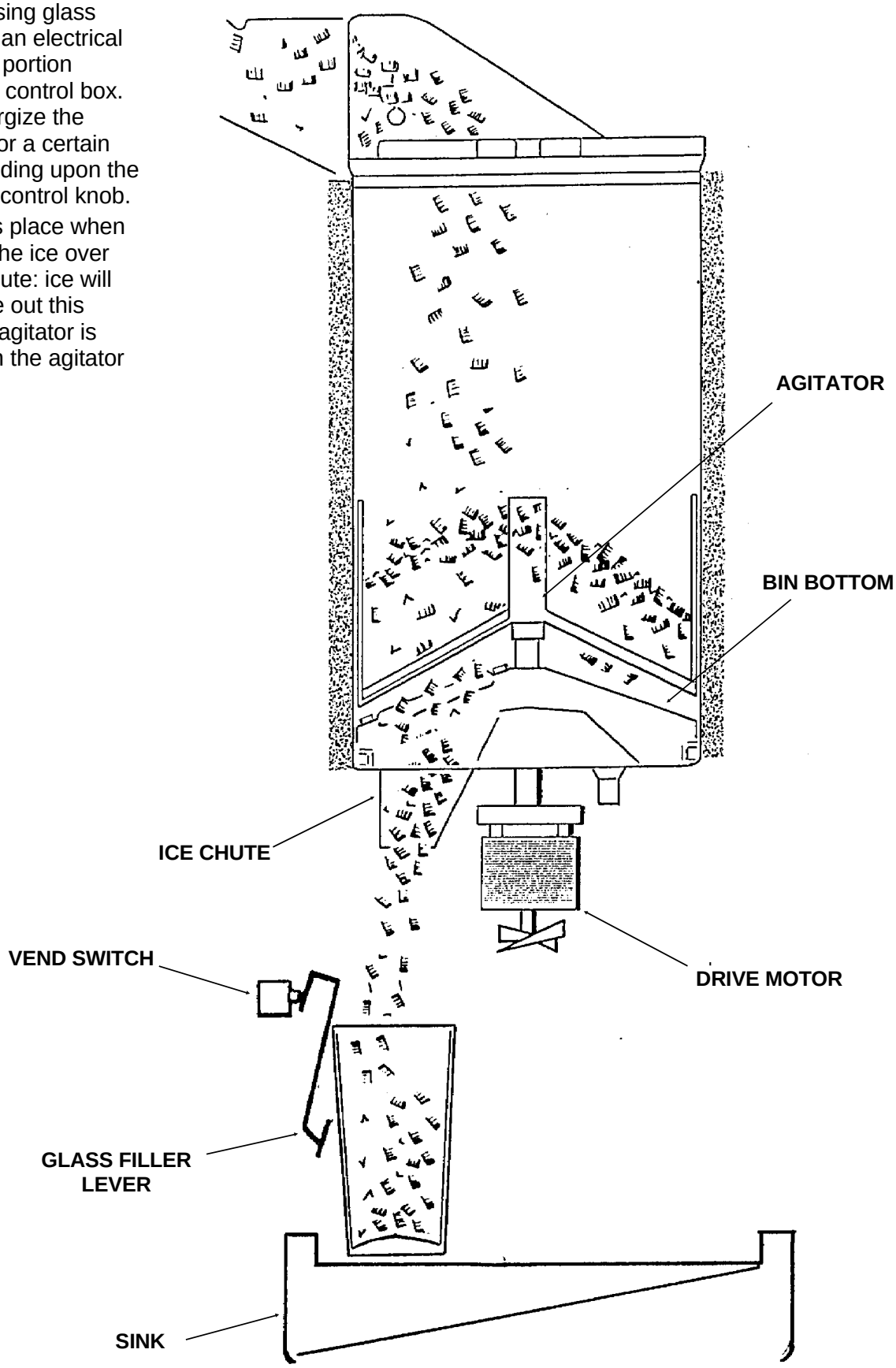

//

A Scotsman Ice System represents a sizable investment of time and money in any company's business. In order to receive the best return for that investment, it MUST receive periodic maintenance.

It is the USER'S RESPONSIBILITY to see that the unit is properly maintained. It is always preferable, and less costly in the long run, to avoid possible down time by keeping it clean; adjusting it as needed; and by replacing worn parts before they can cause failure. The following is a list of recommended maintenance that will help keep the machine running with a minimum of problems.

Maintenance and Cleaning should be scheduled at a minimum of twice per year.

//

///////////////////////////WARNING///////////////////////////
Electrical power will be ON when doing in place cleaning. Switch it OFF before completing the cleaning procedures.
//

ICEMAKING SYSTEM: In place cleaning

1. Check and clean any water treatment devices, if any are installed.
2. Remove screws and remove the upper front panel.
3. Move the ON-OFF switch to OFF.
4. Remove the cover to the ice storage bin, and remove the ice.
5. Remove the cover to the water reservoir and block the float up.
6. Drain the water reservoir and freezer assembly using the drain tube attached to the freezer water inlet. Return the drain tube to its normal upright position and replace the end cap.

//////////////////////////WARNING////////////////////////////
Scotsman Ice Machine Cleaner contains Phosphoric and Hydroxyacetic acids. These compounds are corrosive and may cause burns. If swallowed, DO NOT induce vomiting. Give large amounts of water or milk. Call Physician immediately. In case of external contact, flush with water. KEEP OUT OF THE REACH OF CHILDREN.
//

7. Prepare the cleaning solution: Mix eight ounces of Scotsman Ice Machine Cleaner with three quarts of hot water. The water should be between 90-115 degrees F.
8. Slowly pour the cleaning solution into the water reservoir until it is full. Wait 15 minutes, then switch the master switch to ON.
9. As the ice maker begins to use water from the reservoir, continue to add more cleaning solution to maintain a full reservoir.
10. After all of the cleaning solution has been added to the reservoir, and the reservoir is nearly empty, switch the master switch to OFF.
11. After draining the reservoir, as in step 6, wash and rinse the water reservoir.
12. Remove the block from the float in the water reservoir.
13. Switch the master switch to ON
14. Continue ice making for at least 15 minutes, to flush out any cleaning solution. Check ice for acid taste - continue icemaking until ice tastes sweet.

////////////////////////////WARNING//////////////////////////
DO NOT USE any ice produced from the cleaning solution.
Be sure no ice remains in the bin.
//

15. Remove all ice from the storage bin.
16. Add warm water to the ice storage bin and thoroughly wash and rinse all surfaces within the bin.
17. Sanitize the bin interior with an approved sanitizer using the directions for that sanitizer.
18. Replace the ice storage bin cover, and the front panel.

MAINTENANCE AND CLEANING

////////////////////////WARNING////////////////////////////

Disconnect electrical power before beginning.

//

1. The ice machine senses water level by a probe located in the water reservoir. At least twice a year, the probe should be removed from the reservoir, and the tip wiped clean of mineral buildup.

2. The bin control uses devices that sense light, therefore they must be kept clean enough so that they can "see". At least twice a year, remove the bin control sensors from the grommets in the ice chute, and wipe them clean.

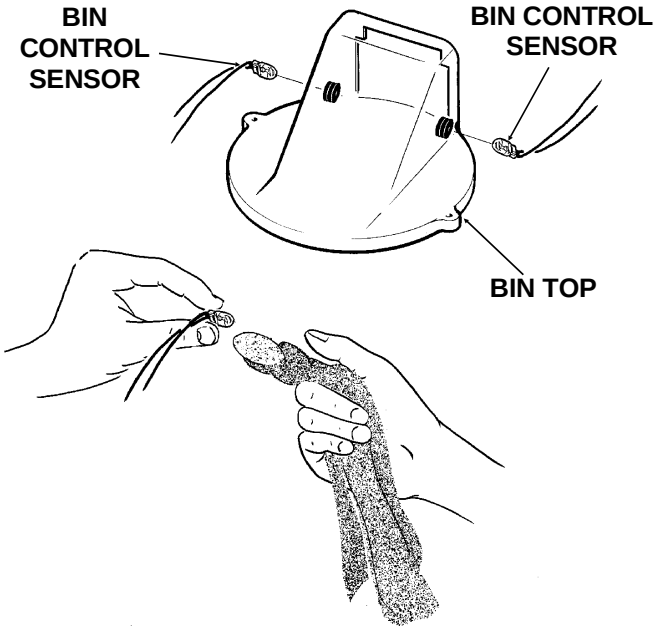

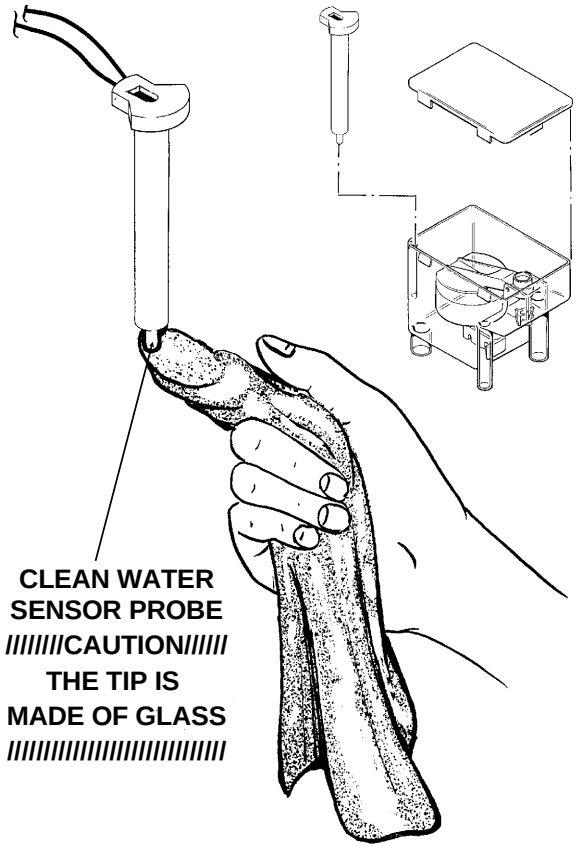

3. The bearing in the breaker should also be checked at least **two times per year**.

A. Check the bearing by:

- removing the ice chute cover
- unscrewing the ice sweep
- removing the water shed
- using a spanner wrench and unscrewing the breaker cover.
- unscrewing the auger stud

Inspect the assembly, looking for wear.

See Removal and Replacement to replace bearing or seals. Reverse to reassemble.

4. Check and tighten all bolts and screws.

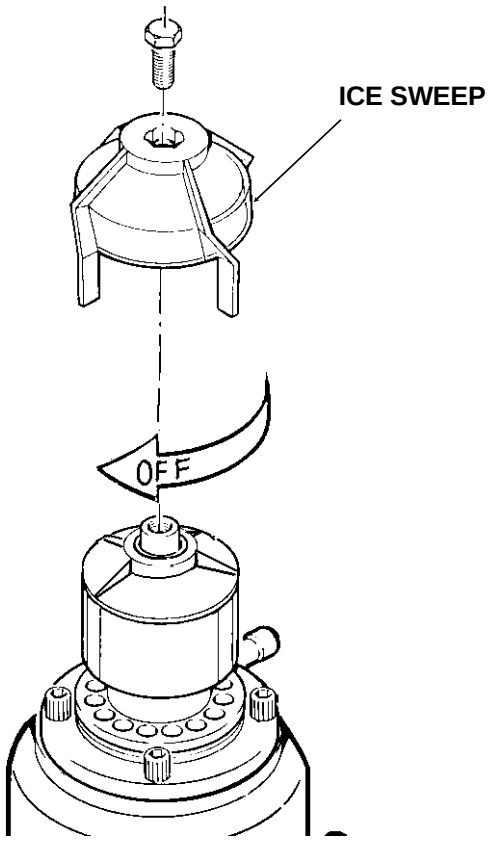

MAINTENANCE AND CLEANING

In some areas, the water supply to the ice maker will contain a high concentration of minerals, and that will result in an evaporator and auger becoming coated with these minerals, requiring a more frequent removal than twice per year. If in doubt about the condition of the evaporator and auger, the auger can be removed so the parts can be inspected.

Note: Water filters can filter out suspended solids, but not dissolved solids. "Soft" water may not be the complete answer. Check with a water treatment specialist regarding water treatment.

For more information on removal of these parts, see REMOVAL AND REPLACEMENT.

1. To remove the auger, remove the front and top panels.
2. Remove 3 hex studs holding ice chute cover to ice chute, and remove cover.
3. Unscrew and remove ice sweep.
4. Loosen band clamp under ice chute, and remove ice chute from evaporator.
5. Remove 4 allen screws holding breaker to evaporator.
6. Pull up to remove auger.

After the auger has been removed, allow the auger to dry: if the auger is not bright and shiny, it must be cleaned.

Clean the auger and evaporator as required. DO NOT HONE THE EVAPORATOR.

7. Replace the water seal.
8. Reverse to reassemble.

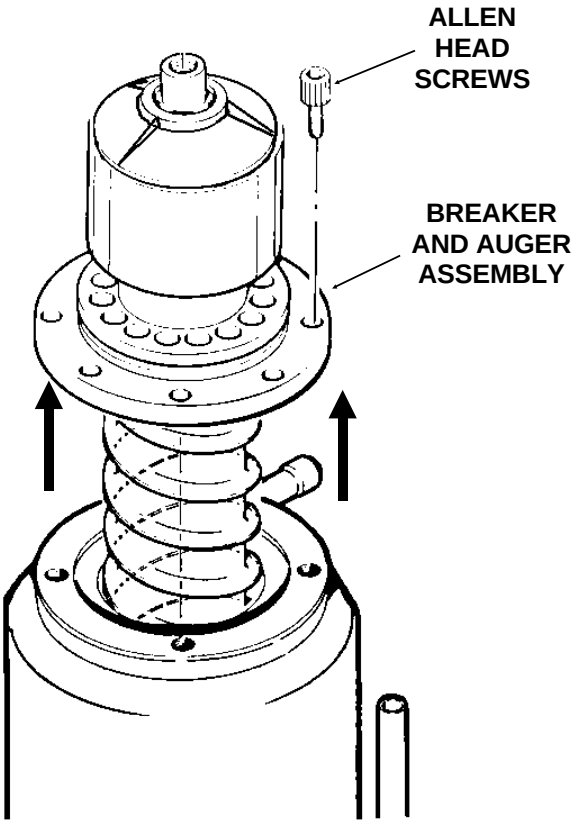

SERVICE DIAGNOSIS: Condition - No Ice Being Produced

STATUS: *ICE MAKER DOES NOT OPERATE*

A. Check**: Voltage** to the unit, restore it if there is none. Compare to the nameplate.

B. Check**:** The **master switch**, switch ON if off.

C. Check**:** The **3 reset switches**, (circuit board, high and low pressure): depress and release each switch. If the still does not start, check: the spout switch; the high and the low side pressures.

D. Check the **low pressure cut out,** if closed, go to **E;** if it is open, it could be due to**:**

- Low refrigerant charge
- The auger not turning
- Restricted system
- TXV not opening

1. Check the low side pressure, the low pressure cut out opens at pressure below 4 psig. If open, reset and:

a. Check if the **auger** is turning, if it is not, remove the **gearbox** and:

Check for internal damage, repair and replace in the machine.

b. Check for low charge, add some refrigerant, if the unit will operate,(normal low side pressure being about 30 psig) stop and look for a leak, repair, replace the drier, evacuate, and weigh in the nameplate charge. If, with added charge, the unit does **not** operate:

Check for a restricted system, replace the drier, evacuate, and weigh in a nameplate charge.

Check for a **Thermostatic Expansion Valve** that does not open, if defective, replace it. Replace the drier, evacuate, and weigh in the nameplate charge.

E. Check the **high pressure cut out,** if closed, go to **F**; if open:

1.The pressure control opens at 450 psig. **Check** the high side pressure, reset the control, and observe: on water cooled, that water soon begins to flow from the condenser drain; or, on air cooled, that the fan is forcing air through the condenser. If the unit trips out on pressures below 450 psig, replace the control. If the pressures rise above the trip out point, and the unit shuts down:

a. Check for adequate water flow on water cooled, if adequate, clean the interior of the condenser. If the pressures are still too high replace the water regulating valve.

b. Check for adequate air flow on air cooled. Clean the condenser and (if used) the filter. If the air flow is poor because of the installation, advise the user that the unit should be moved, or the air around it kept cooler.

Check the fan motor for tight bearings and proper rotation.

Check that the fan blades are clean, and the fan secure to the fan motor shaft.

F. Check the **spout switch**. It opens from excess pressure of ice inside the ice chute: this should only happen when the machine does not shut off when the ice storage bin is full. This switch will reset when the ice melts, but the machine will not restart until the reset switch on the circuit board is pressed.

G. Check the **water level** in the reservoir. The machine will not run if there is not enough water in the reservoir.

1. Restore/adjust water level. See the next step.

SERVICE DIAGNOSIS: Condition - No Ice Being Produced

STATUS: *ICE MAKER DOES NOT OPERATE*

H. Check: The gear **motor**, if it will not run, the compressor will not run. If no power to it:

Check**:** The **indicator lights** on the circuit board, the **bin empty** light should be ON, the **no water** light should be OFF **.**

1. If the **bin empty** and **no water** lights are off, check the **transformer**.
   a. Transformer "load" side should have 12 to 15 volts. If not, check the "line" side. The line side should have between 110-120 volts. If the line side has the correct voltage and the load side does not, replace the transformer.
2. If the transformer is good, and the **bin empty** light is OFF, check the **ice level sensors**.
   a. Remove sensors by pulling them out of the ice chute grommets. Visually inspect them, clean if needed.
   b. Look through the ice chute "eye" hole for something blocking the ice chute.
   c. If the unit still does not run, replace the ice level sensors.
   d. If the bin empty light is still OFF, check the **circuit board**.
      1. Unplug "opto trans" and "LED" connectors from the circuit board.
      2. Plug "opto trans" and "LED" connectors from the Scotsman Electronic Control Testor Model NM1 into the circiut board.
         a.Move the "bin full" switch on the tester to the full position. The bin full light on the tester should be ON, if not, replace the circuit board.
         If the bin full light on the tester is ON, move the tester switch to "bin empty" the light on the tester should go OFF and the bin empty light on the circuit board should go ON. If not, replace the circuit board. If it does as above, and the machine still does not run, replace the ice level sensors.
3. If the transformer is fine, and the "no water" light is ON, check the **water level sensor.**
   a. Check the water level in the **reservoir,** restore if low. If the water level is ok:
   b. Remove the water level sensor from the reservoir and clean the tip if dirty.
   CAUTION: THE TIP IS MADE OF GLASS
   c**.** Replace the water level sensor. If the no water light is still on, check that the "water sen" plug is firmly plugged into the circuit board.
   d. If the no water light is still on,
      1. Unplug the "water sen" connector from the circuit board.
      2. Plug "water sen" connector from the Scotsman Electronic Control tester into the circuit board.
         a. Move the water switch on the tester to "no water" and the no water light on the circuit board should go on. If not, replace the board.
         b. Move the water switch to the "water" position, the no water light should go off, if not, replace the circuit board.
         c. If after the above, the machine still will not run, replace the water level sensor

SERVICE DIAGNOSIS: Condition - No Ice Being Produced

MORE INFORMATION ON THE CIRCUIT BOARD TESTER IS LOCATED AT THE END OF THE MANUAL.

STATUS: *GEARMOTOR OPERATES, COMPRESSOR DOES NOT*

A. Check the **compressor relay.**

The relay is on the circuit board, if it does not supply power to the contactor coil, the compressor will not run.

1**.** Check for power at the contactor coil, if none:

a**.** Check for power at the compressor relay at the circuit board.

If there is power at the relay, but none at the contactor coil,

Check for an open wire between the relay and the contactor.

2**.** Check the contactor coil. If the coil is open, replace the contactor.

3**.** Check the auger drive motor centrifugal switch. If, when the drive motor is running, contact 4 (black wire removed) has no power, and all of the above switches have been checked, replace the centrifugal switch, or the drive motor.

4**.** If the compressor relay on the circuit board has power on the NO contact, but not on the COM contact, replace the circuit board.

B. **Check the compressor**

1. Check the compressor start relay.
2. Check the start capacitor.
3. Check the windings of the compressor for open windings or shorts to ground.

Replace those items found defective.

ND650

SERVICE DIAGNOSIS: Condition - Low Ice Production

STATUS: *EVERYTHING IS OPERATING*

A. Check the air cooled condenser for dirt. Clean as required. Check the head pressure on water cooled. Adjust as required. If the head pressure is very high:

1. Air cooled. Check for high air temperatures, or restrictive air flow. Correct as needed.
2. Water cooled. Check for high water temperatures, or low water pressure. Correct as needed.
3. The refrigerant may contain non condensable gases, purge, evacuate, and recharge per nameplate.

B. Check the evaporator

1. Clean the evaporator, the mineral build up will adversely affect the ice machines production.
2. Check the evaporator for water leaks, replace the water seal if found to be leaking.
3. Check the low side pressure; normal is about 30 psig. If low, assume a refrigerant leak, locate, repair and recharge.
   If no leak, the TXV may be restricted, defective or not adjusted properly. If needed, replace the TXV, evacuate, and recharge per nameplate.
4. Check the insulation on the evaporator. It should be dry, with no wet spots or frost.
   If the insulation has failed: replace the evaporator or add extra insulation in the form of foam tape to the evaporator.

C. Check the compressor.

1. The compressor may be inefficient.
   a. Check the amp draw, if low change the compressor.
   b. if the amp draw is normal, pinch off the suction line to check the pull down capability of the compressor. The compressor should pull down to 25 inches of vacuum and hold there for three to five minutes.

SERVICE DIAGNOSIS: Condition - Poor or No Ice Dispensing

STATUS: *There is power to the unit, but no ice dispensed*

A. Check for ice in the bin. If no ice, check the ice making system.

If the ice making system is normal, the demand for ice may exceed the quantity the icemaker dispenser can produce. Check with the user on ice usage: advise the user that another machine may be needed.

B. Check for motion in the agitator when the glass filler lever is pushed, if no motion: Check the vend switch, if it does not close when the glass filler lever pushes in the actuator button, replace the switch.

1. If the vend switch does close, check for voltage at the agitator drive motor: if none, replace the portion control module in the control box. If there is voltage, and the agitator motor output shaft does not turn, replace the agitator gear motor assembly.

If the agitator moves when it is supposed to, and there is ice, the dispensing cycle should be fine. If no ice is dispensed, check for an obstruction in the ice chute.

C. No portion control.

1. Continuous dispensing when the glass filler lever is pushed in: Check for an open potentiometer (portion control). If open, replace it.

If it is not open, replace the portion control module in the control box.

2. Very short dispensing: Check for a shorted potentiometer (portion control). If shorted, replace it.

If it is not shorted, replace the portion control module in the control box.

WATER RESERVOIR

1. Shut off the water supply to the icemaker.
2. Remove front panel and reservoir cover.
3. To remove float only, pry the mounting flanges apart enough to lift one float pivot pin out of the flange hole, and pull float up and out of the reservoir.
4. To remove reservoir, disconnect water inlet compression fitting at reservoir inlet.
5. Remove drain hose from reservoir.
6. Remove evaporator inlet hose from reservoir.
7. Remove mounting screws from reservoir bracket, and remove reservoir from icemaker.
8. Reverse to reassemble.

BIN CONTROLS (Ice Level Sensors)

1. Disconnect electrical power.
2. Remove front panel.
3. Remove control box cover.
4. Locate bin top, in front of and behind it are two rubber bin control grommets.
5. Pull each bin control out, and in the control box, disconnect the electrical leads connecting the bin control to the circuit board.
6. Reverse to reassemble, be certain that the bin controls are aligned so that the ice level sensors are visible (centered) through the holes in the ice chute.

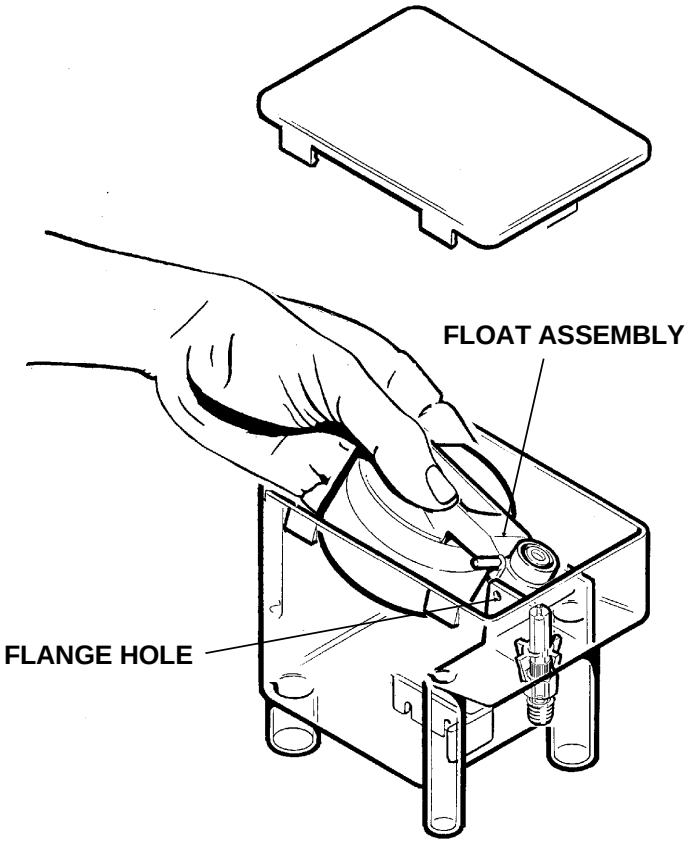

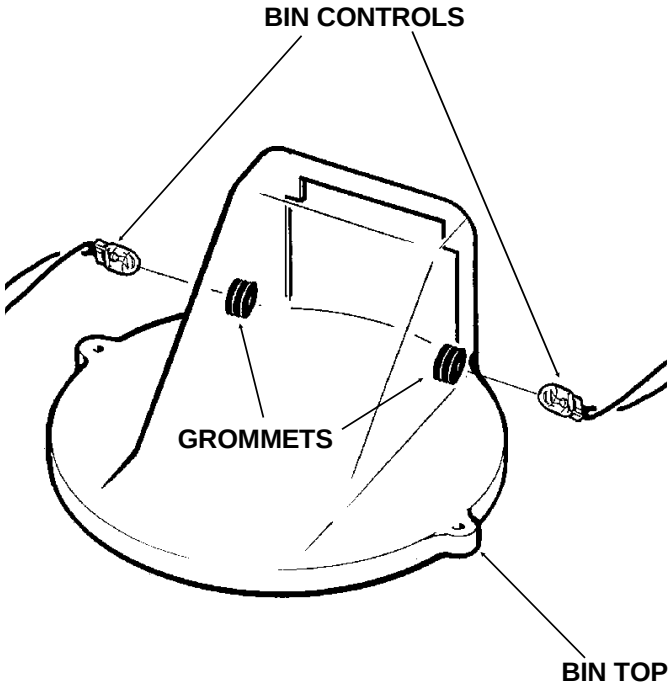

REMOVAL AND REPLACEMENT: Bearing And Breaker

Note: Removal of the auger, water seal, evaporator and gearmotor must begin at the top of the assembly.

To Remove the Breaker Bearing Assembly:

////////////////////////////WARNING////////////////////////////

Disconnect the electrical power to the machine at the building source BEFORE proceeding with any repair.

//

1. Remove panels and disconnect electrical power.

2. Unscrew three studs and remove ice chute cover.

3. Unscrew and remove ice sweep.

4. Remove insulation halves from outside of ice chute, loosen band clamp under ice chute, lift up and remove ice chute.

5. The breaker may be removed from the auger and evaporator without disturbing the auger.

a. Use spanner wrench and unscrew breaker cover from breaker (left hand threads)

b. Unscrew auger stud from top of auger.

c. Unscrew 4 allen head cap screws holding breaker to evaporator.

d. Lift up, and remove breaker/bearing assembly from auger & evaporator.

6. Service the bearing. Check for rust, rough spots and damage.

a. The bearing is pressed into the breaker, to remove the bearing and replace it an arbor press is needed.

b. Replace lower seals before installing new bearing in breaker.

Note: seals must be pressed in with a tool pushing against the outer edge only, they will not install by hand.

Replace parts as required. Re-grease bearing with Scotsman part no. 19-0609-01 bearing grease. Replace top seal, and check the o-rings, replace if cut or torn.

7. Reverse to reassemble: specific tools and materials are required to install properly.

a. Add food grade grease such as Scotsman part number 19-0569-01 to the seal area before installing on the auger.

b. Check the seal to shaft areas for cuts, or rough spots: none are permitted.

Steps 3 - 5a

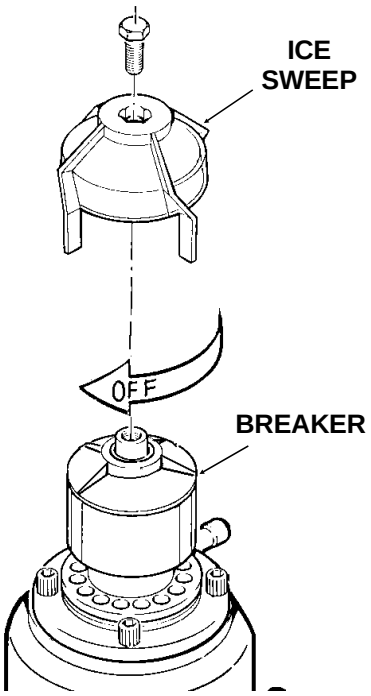

Step 5 b

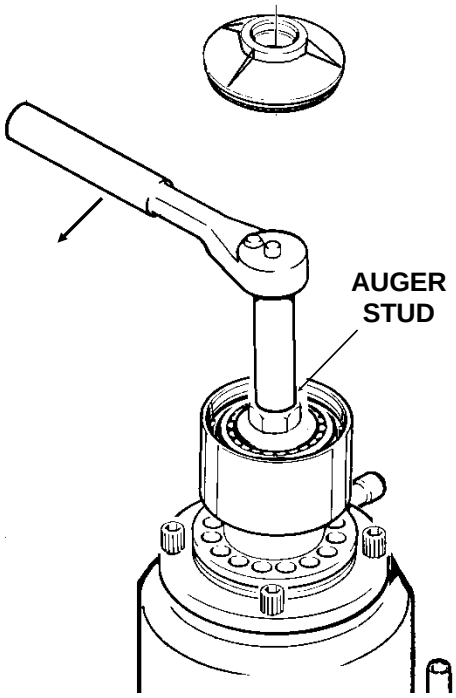

Steps 5c - 6

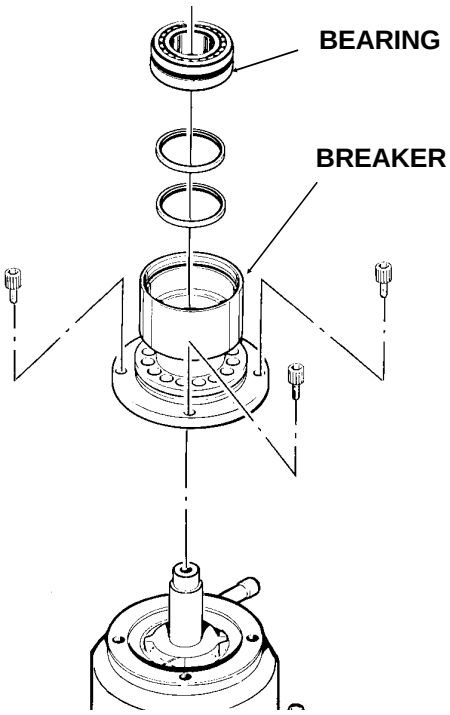

To Replace the Evaporator:

(Assuming all the steps for removal of the thrust bearing, breaker, auger, and water seal have been performed.)

1. Discharge the refrigerant from the ice maker.
2. Unsweat the refrigerant connections:

a) At the thermostatic expansion valve outlet.

//////////////////////////////CAUTION//////////////////////////////

Heat sink the TXV body when unsweating or resweating the adjacent tubing.

//

b) At the suction line at the joint about 3" from the evaporator.

3. Remove the evaporator.
4. Unsweat the drier from the liquid line.
5. After installing a new water seal in the new evaporator (see “To Replace the Water Seal”) sweat in the new evaporator at the old tubing connections.
6. Install an new drier in the liquid line.
7. Evacuate the system until dehydrated, then weigh in the nameplate charge. Check for leaks.
8. Install auger, breaker, breaker bearing assembly, and ice discharge chute in reverse order of disassembly.

To Reassemble the Evaporator and Auger

1. After the gearmotor has been inspected, fasten the evaporator to the gear motor, be sure that the number of shims indicated on the gear case cover is in place between the gearcase cover and the drip pan gasket. Torque the bolts to 110 inch pounds.
2. Lower the auger into the evaporator barrel, slightly turning it to match up with the drive end. Do Not Drop Into the Evaporator.
3. Complete the reassembly by reversing the disassembly for the breaker & thrust bearing assembly.

For Access to the Evaporator to Gearmotor bolts:

1. Remove upper front and top panels.
2. Remove screws holding control box assembly to the cabinet, move the control box out of the way, temporarily secure to cabinet.
3. Remove the upper half of the ice chute.
4. Remove the ice sweep.
5. Loosen clamp under ice chute, and remove the lower half of the ice chute.
6. Remove the 2 screws securing the front portion of the gearmotor support to the cabinet
7. Move the the gearmotor - evaporator to the right: space is now available for removal of the evaporator and gearmotor bolts. When reassembling, reverse the above steps.

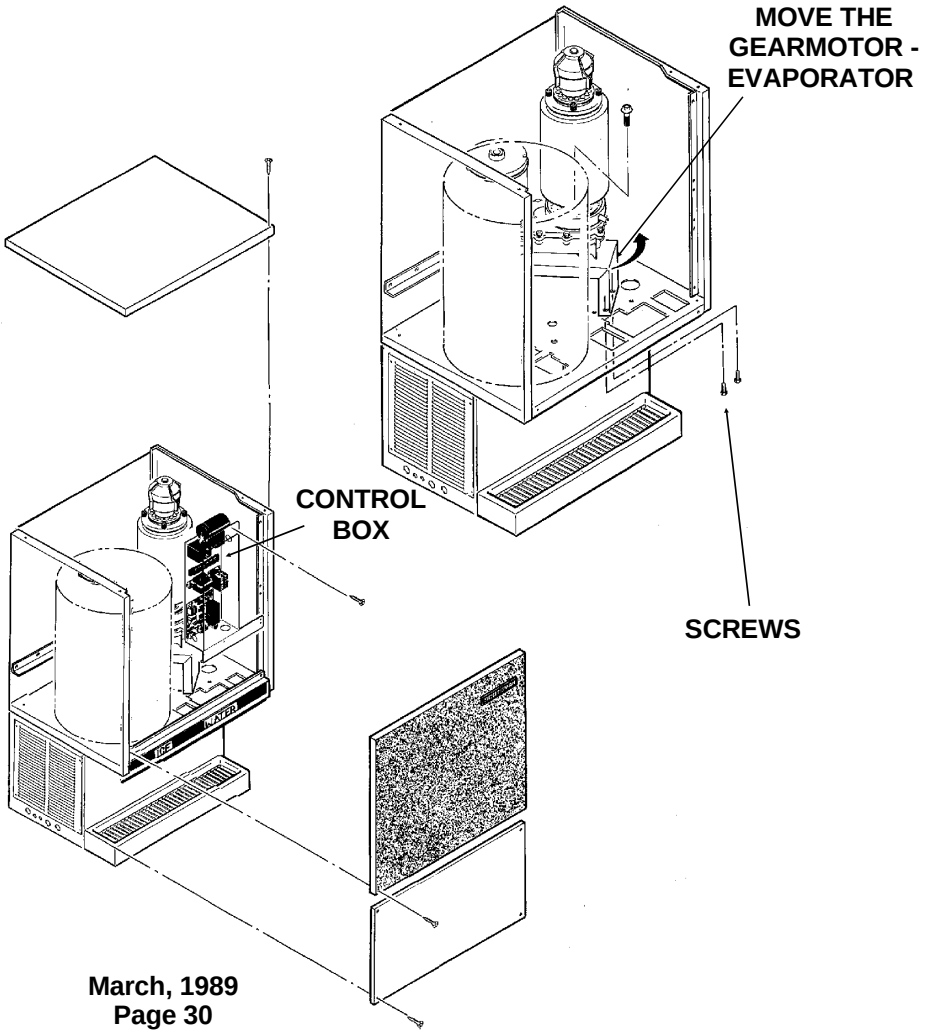

TO REMOVE AND REPAIR THE GEARMOTOR ASSEMBLY

(Assuming that the procedures through removal of the water seal have been performed.)

1. Remove the electrical wires from the gear drive motor.

////////////////////////////WARNING////////////////////////////

Disconnect electrical power before begining removal procedures.

//

2. Unscrew the 4 cap screws holding the gearmotor to the gearmotor plate.

3. Remove the gearmotor from the icemaker.

To Inspect the gearmotor.

A) Remove the cap screws holding the gearmotor case halves together and pry the two cases apart.

B) To lift off the cover, lift up until you can feel internal contact, then pull the cover towards the output gear end, and then lift the cover (with drive motor attached) up and away from the gear motor case.

Note: The case cover output gear, bearings, and shaft are one pressed together assembly. Replace as a unit.

C) Inspect the oil, gears, and bearings. If the oil level and condition is acceptable, quickly check the gears and bearings. They are likely to be fine if the oil is.

If there is evidence of water in the oil (rusty bearings and gears; the oil having a creamy white appearance; oil level too high) carefully inspect the bearings and gears. If in doubt about the condition of a part, replace it. The oil quantity is 14 fluid ounces, do not overfill.

Note: The gears and bearings are available only as pressed together sets.

D) After replacing parts as required, (if any) reassemble the gearcase. The two smaller gears and the oil should be in the lower case, the output gear will be with the cover. As you lower the cover onto the lower case, cover will have to be moved closer to the second gear after the output gear has cleared the second gear top bearing.

E) After the case is together, and the locating pins are secure in both ends, replace all cap screws.

Note: If the gearcase cover was replaced, the replacement part MAY HAVE BEEN shipped with a certain number of shims. The number of shims used **must** match the number writen on the gearcase cover. **If there were no shims on the new parts, do not use any shims**. Do not use the old shims.

4. Bench test the gearmotor, check for oil leaks, noise, and amp draw.

ND650

TO REMOVE AND REPAIR THE GEARMOTOR ASSEMBLY

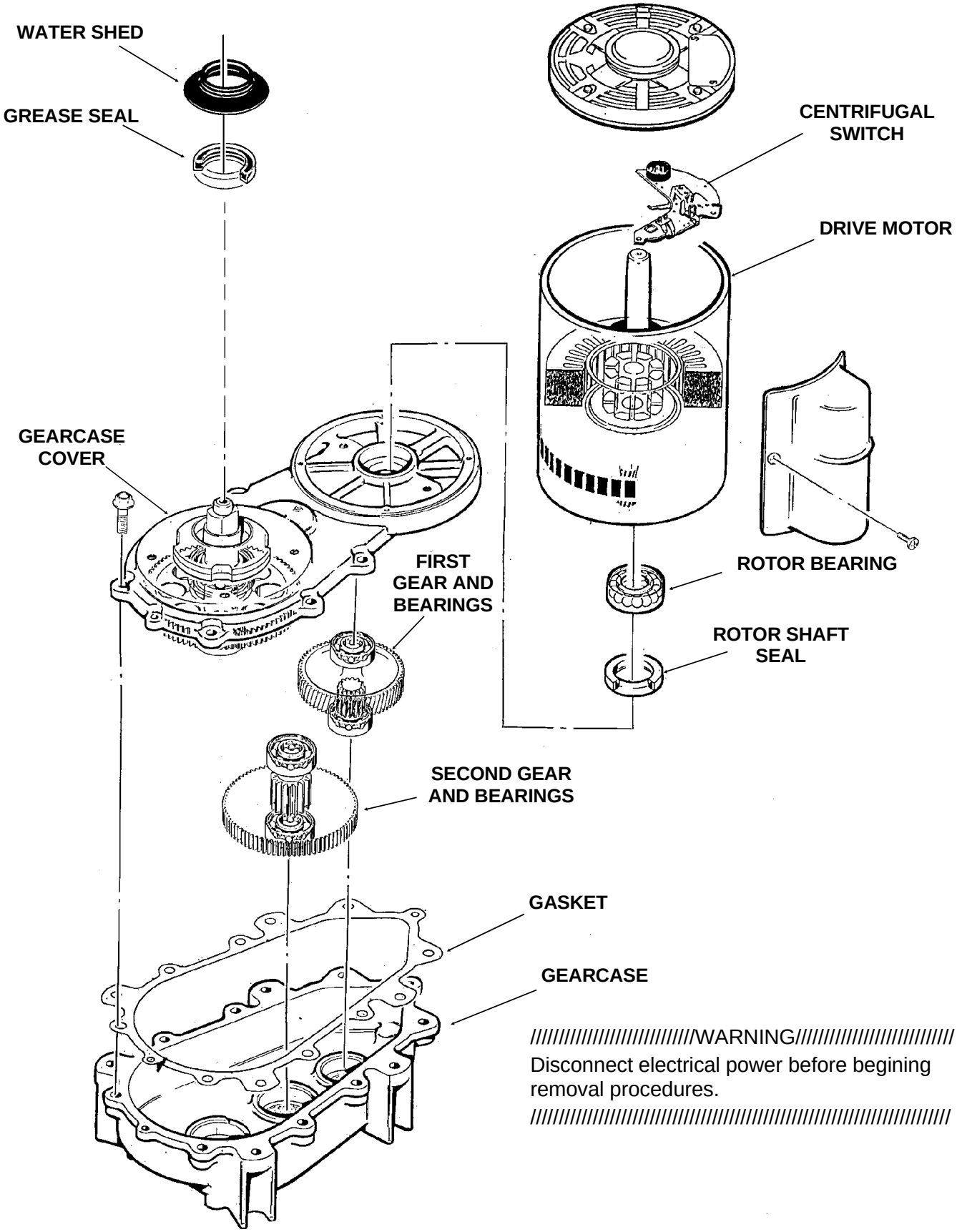

////////////////////////////WARNING////////////////////////////

Disconnect electrical power before begining removal procedures.

//

REMOVAL AND REPLACEMENT

INSTRUCTIONS FOR USING TESTER MODEL FC1 (Optional, order part no. A33942-001)

(These instructions assume that the unit will not run, and prior investigation of electric power, controls, and mechanical parts indicates that the electronic circuit may be at fault.)

//WARNING//

These procedures require the machine to be connected to the power supply. The voltages of the electronic circuit are very low, but HIGHER VOLTAGES ARE PRESENT IN THE UNIT. For example, the relays on the circuit board are at **line** or **high** voltage. Do not touch anything but the tester while the unit is being checked out.

Make all connections to the circuit board with the ELECTRICAL POWER OFF.

//

Bin Control *Note: All testing is done with the electrical power on, the master switch on, and all reset switches "reset" .*

1. Unplug "photo trans" and "LED" connectors from the circuit board.

2. Plug "photo trans" and "LED" connectors from the tester into the circuit board.

a. Move the "bin full" switch on the tester to Full. The light on the tester should be ON.

If the light on the tester is not on, the circuit board should be replaced.

b. If the light on the tester IS on, move the "bin full" switch to Bin Empty. The light on the tester should go OFF, and the Bin Empty light on the circuit board should go ON.

If the Bin Empty light is ON, wait 10-20 seconds for the machine to start. If the machine starts, replace the ice level sensors.

If the Bin Empty light does not come ON, the circuit board should be replaced.

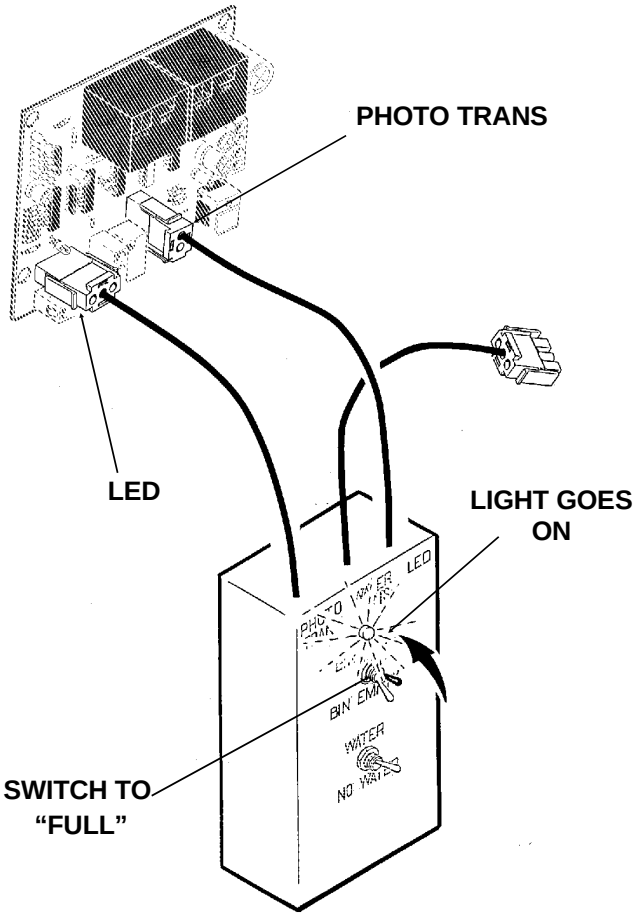

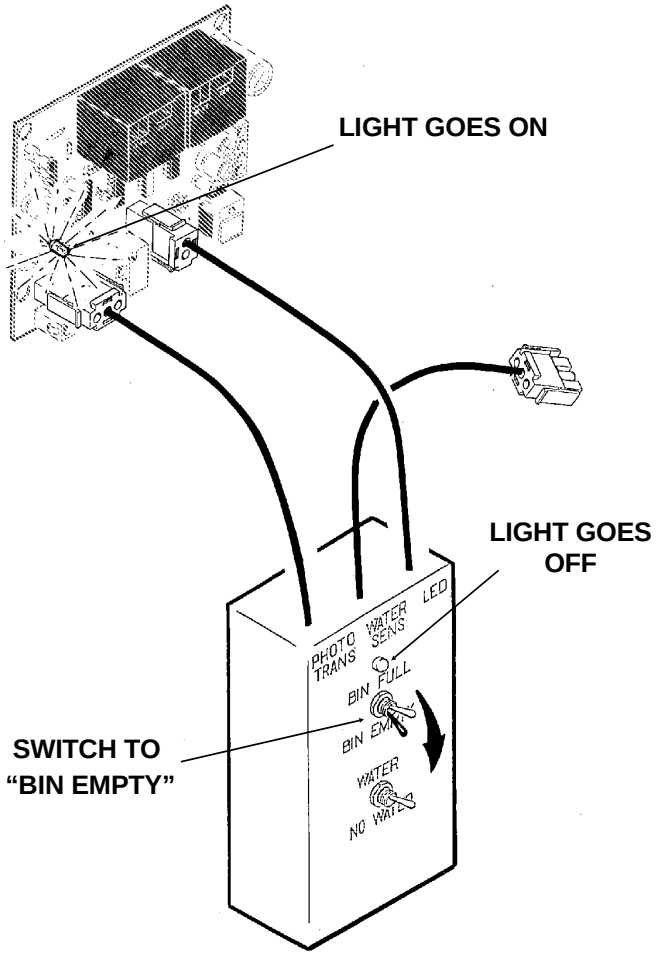

Water Level

1. Unplug "water sen" connector from control board.

2. Plug "water sen" connector from Scotsman tester into circuit board.

a. Move "water" switch on tester to No Water position. The No Water light on the circuit board should go ON. If not, replace the circuit board.
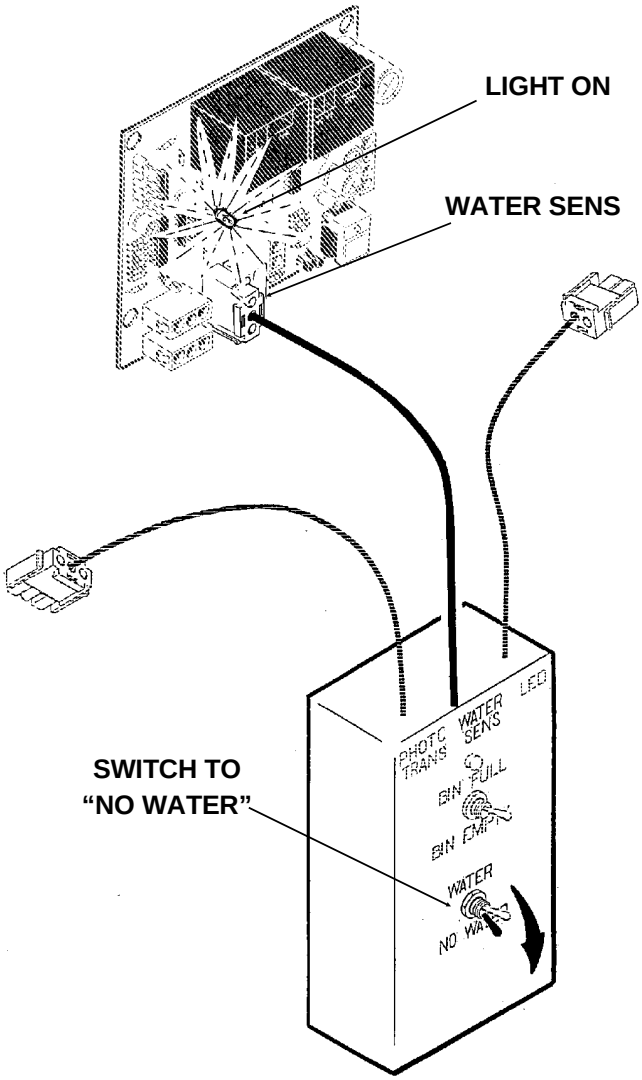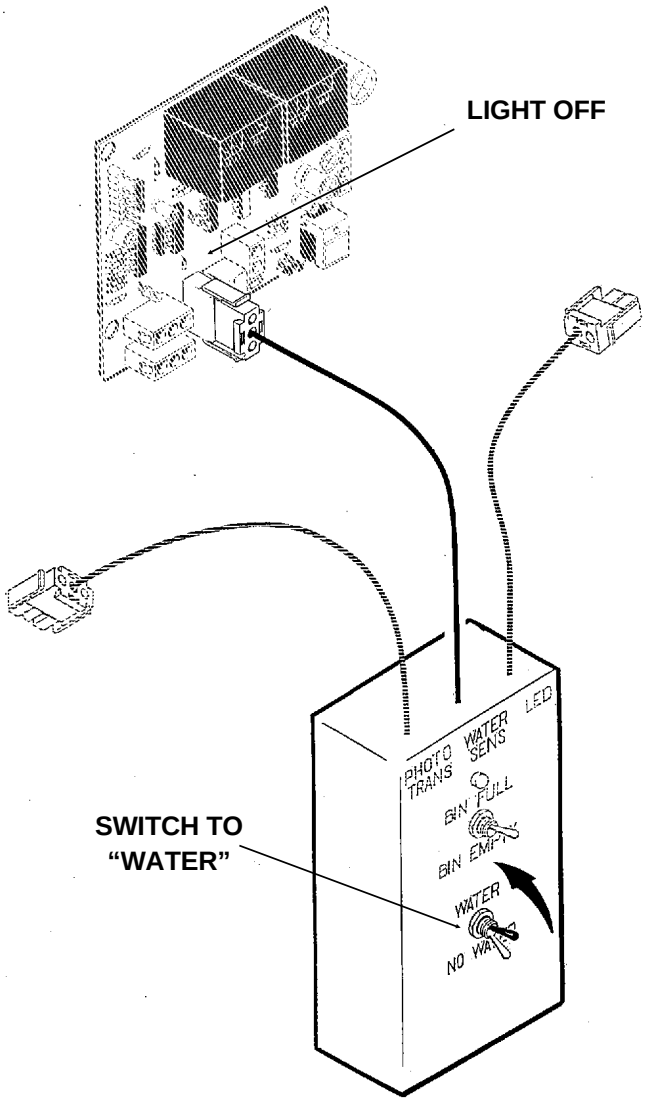
b. Move the "water" switch on the tester to the Water position. The No Water light on the board should go OFF. If not replace the circuit board. If the light does go off, replace the water level sensor.